Carver County
Water Resource Management
Ordinance and BMP Guidelines

Table of Contents

Section 1. Ordinance Guidance 2
- A. Calculating Treatment Volumes and Selecting BMPs 2
- B. Volume Credit Banking Guidance 4
- C. Upstream and Downstream Impacts Guidance 6
- D. Maintenance Plan Guidance 7
- E. Wetland Transition Setback Guidance 8
- F. Topsoil Management Plan Guidance 9
- G. Selecting Vegetation 13

Section 2. Best Management Practice (BMP) Guidance 14
- A. Volume Control Credit Calculations 14
- B. Water Quality Credit Calculations 16
- C. BMP Design Guidance 19
  - 1) Amended Soil Design Guidance 20
  - 2) Green Roof Design Guidance 22
  - 3) Stormwater Reuse Design Guidance 23
  - 4) Preservation or Restoration of Upland Vegetation Design Guidance 26
  - 5) Pond Bioretention Bench or Bioretention Shelf Design Guidance 27
  - 6) Disconnecting Impervious Surface Design Guidance 28
  - 7) Hydrodynamic Separator Design Guidance 29
- D. BMP Construction Details 30

Section 3. CCWMO Calculator Guidance 31

Section 4. Example Maintenance Plan and Declaration 38

Section 5. Upland Preservation Easement Template 39

Section 1. Ordinance Guidance

These guidelines have been developed in accordance with the Carver County Water Resource Management Ordinance (Rules) that went into effect **October 15, 2016**. The intention is to show example calculations and typical best management practices (BMPs) that can be used to meet the water quality and volume reduction requirements of the Rules. BMPs other than those described in these guidelines may also be used; available references for BMP designs and descriptions can be found in the Minnesota Stormwater Manual.

A. Calculating Treatment Volumes and Selecting BMPs

Related Ordinance Section(s): § 153.56

Guidance on Calculating Treatment Volumes

For The treatment volume is a storm event of 1inch. If the site has a qualifying constraint, volume retained is reduced to 0.5 inches and water quality treatment will be 1 inch, as indicated below. Linear Projects have an added requirement to treat ten (10) percent of reconstructed impervious surfaces.

1. Volume Retained. The requirement is 1 inch from the site impervious or 0.5 inches from the site impervious area if site has a qualifying constraint.

2. Water Quality Treatment. The requirement is 1 inch from the site impervious. All volume reduction BMPs assume a 100% reduction for Water Quality treatment up to 0.5 inches, resulting in a total treatment requirement of 0.5 inches.

Calculating the required TOTAL Treatment Volume for a Site

Non-linear Site

Assume a 5 acre commercial site has 75% impervious. Calculate the treatment volume as follows:

Step 1: Calculate the VOLUME to be RETAINED on site (1 inch)

163,350 ft^2 of impervious x 1 inches x 1 ft /12 inches = ***13,613 ft^3***

Step 1A: If site is constrained: Calculate the VOLUME to be RETAINED on site (0.5 inches)

163,350 ft^2 of impervious x 0.5 inches x 1 ft /12 inches = ***6,806 ft^3***

Step 2: Calculate the VOLUME to be treated for WATER QUALITY (0.5 inches)

13,613 ft^3 – 6,806 ft^3 = ***6,807 ft^3***

Linear Site

Assume a linear project of 4 acres of new impervious and 1 acre of reconstructed impervious. Calculate the treatment volume as follows:

Step 1: Add 10 percent of the reconstructed impervious area to the total new impervious area

174,240 ft^2 + 4,356 ft^2 **= 178,596** ft^2

Step 2: Calculate the VOLUME to be RETAINED on site (1 inch)

178,596 ft^2 of impervious x 1 inches x 1 ft /12 inches = ***14,883 ft^3***

Step 2A: If site is constrained: Calculate the VOLUME to be RETAINED on site (0.5 inches)

178,596 ft^2 of impervious x 0.5 inches x 1 ft /12 inches = ***7,442 ft^3***

Step 3: Calculate the VOLUME to be treated for WATER QUALITY (0.5 inches)

14,883 ft^3 – 7,442 ft^3 = ***7,441 ft^3***

Select BMPs

Review Section 2. Best Management Practice (BMP) Guidance to identify potential BMPs for volume control and water quality treatment for your site.

Demonstrate that Volume, TP and TSS Removal Requirements Have Been Met

Section 2 Best Management Practice (BMP) Guidance can be used on how to calculate the volume treated and pollutant removal percentages for each BMP selected for the site. A calculator is available on the Carver County website (http://www.co.carver.mn.us/home/showdocument?id=5871) for use in demonstrating that the requirements have been met and is further described in Section 2.C.

B. Volume Credit Banking Guidance

Related Ordinance Section(s): § 153.56(E)(5)

Purpose

Carver County WMO is establishing a Stormwater Credit Banking Program for Local Government Units (LGUs) that construct regional water treatment projects. These practices are intended to treat stormwater to a higher quality than is required by federal laws, state statutes, and county ordinances creating a positive balance of stormwater treatment credits. These credits are then available for other projects within the LGU boundaries.

In addition to the regional treatment practices, LGUs can also retrofit existing best management practices (BMPs) that treat more than is required or construct BMPs that are designed to treat what is more than required. In either situation, the extra credits are also qualified to be used within the Stormwater Credit Banking Program.

Establishing a Stormwater Credit Bank

An LGU can apply to establish a stormwater credit bank that can be used by other entities, both private and public. It will be the responsibility of the LGU to establish the cost for each credit being offered. Once established, it is the responsibility of the LGU to track the use of credits, with the WMO reviewing all applications for credit withdrawal.

To apply, the LGU must submit the following items:

- Site Plan
- Stormwater Management Plan and Details
- Hydrologic, Hydraulic, and Water Quality Computations
- Regional plan for usage
- Credit Bank Spreadsheet

Eligible BMPs

Certain BMPs that have a volume reduction credit will be eligible for a stormwater credit bank. These BMPs are:

- Stormwater Reuse
- Pervious Pavement
- Upland Restoration
- Amended Soils
- Bioretention basins with 3 feet of separation
- Green Roof

Credit Utilization

Once a credit bank has been established, the LGU has the authority to release credits. Credits can be used in the following ratios based on location:

- 1:1 credit when used within the same major subwatershed

0.5:1 credit when used outside the same major subwatershed

Banking Spreadsheet

The LGU will establish a banking spreadsheet to record the initial credits available and subsequent credit withdrawals. For each tab, or individual BMP selected, there are two sections that make up the spreadsheet. The top portion is for the initial design of the BMP with an estimated credit available. The bottom portion is designed for tracking of credits that are remaining in the bank. Each time a new applicant applies and receives credits, this table is updated.

C. Upstream and Downstream Impacts Guidance

Related Ordinance Section(s): § 153.56(G)

Purpose
Development of land can cause significant changes to the surrounding hydrology and nearby properties. Carver County WMO may request additional information for individual developments regarding how changes to a site may impact adjacent properties wither upstream or downstream of the project area. Any changes occurring within the project area cannot cause damage to adjacent parcels.

Required information
CCWMO requires certain information to confirm that development does not adversely impacts adjacent parcels. Impacts occurring upstream of a project site mainly include either impoundment of water or changing water ways due to changes to topography or drainage pipes. To investigate these potential impacts, Carver County Water Management Staff may request the following information:

- Plans showing offsite location and elevations of known tiles and intakes
- Locations and elevations of culverts under roads or farm accesses
- Location and bottom floor elevation of structures
- Perimeter swales or diversions along property lines shall be identified
- Hydrological model indicating no net increase in surface ponding or impediments within a stormwater system, which includes drain tiles.

Carver Soil and Water is available to assist with adjacent agricultural landowners. In summary, the proposed development shall not create berms or show other grading that inhibits existing drainage patterns or causes water to pond offsite.

Downstream impacts can occur due to an increase in volume, poor erosion control, or extreme events. Although the development will be required to maintain or lessen existing rates, to investigate the potential of offsite impacts the applicant may be required to do the following:

- Identify the downstream flowpath to the next receiving water body (wetland, stream, pond, etc.)
- Show the drainage capacity for the EOF flowpath (if different from the typical discharge flowpath)
- Show downstream channel capacity (calculate HWLs, etc.) using the site's discharge pipe(s) one or two year event and at full flow. These full flow rates may be higher than the modeled rates, however it allows for review of offsite system capacity at maximum flows.
- Document the downstream culvert or stormwater conveyance capacity.
- Document road overflow elevations
- Document structure elevations

In summary, the County will review the effect of additional volume and extreme events on downstream systems.

D. Maintenance Plan Guidance

Related Ordinance Section(s): § 153.56(H)

Purpose
Maintenance of stormwater BMPs is of vital importance for long-term operation. Maintenance may consist of sediment removal, vegetation cutting, replanting, changing types of plantings, etc.

Required Information
A maintenance plan or agreement, including the following components shall be provided prior to release of the site escrow:

1. Defines maintenance responsibilities following completion of the project
2. Specifies types and frequency of inspection and maintenance activities
3. Specifies who will conduct inspections and maintenance activities.
4. Site map showing BMP locations with drainage areas for each BMP
5. Planting Plan

A sample maintenance plan and list of inspection activities follow in Section 3.

E. Wetland Transition Setback Guidance

Related Ordinance Section(s): § 153.57(B)

Accepted Wetland Function and Value Assessments

1. Carver County Wetland Function and Values Assessment. The County completed a wetland function and values assessment in 2001. Data is available on the Carver County Property Information mapping application (https://gis.co.carver.mn.us/publicparcel/) or from Planning and Water Management Staff.

2. BWSRs Agricultural Wetland Evaluation Tool. This wetland functional assessment tool was developed for use in evaluating agricultural wetlands. It is based on the latest version of the Minnesota Routine Assessment Method (MnRAM) for evaluating wetland functions, a BWSR-approved wetland functional assessment. See the links below for additional information.

   Guidance Document (http://www.bwsr.state.mn.us/wetlands/wetlandbanking/agbanking/Agricultural_Wetland_Evaluation_Tool_6-26-13.pdf)

   Web Calculator (http://apps.bwsr.state.mn.us/agbank/)

3. Full or modified Minnesota Routine Assessment Method (MnRAM). Applicants may propose to use the full or a modified version of MnRAM to classify wetlands. If using a modified version of MnRAM, please submit information on proposed modifications to the full MnRAM assessment to Planning and Water Management Staff prior to completing the assessment.

   MnRAM 3.4 (http://www.bwsr.state.mn.us/wetlands/mnram/index.html)

F. Topsoil Management Plan Guidance

Related Ordinance Section(s): § 153.60

Purpose
The goal of the Topsoil Management Plan is to preserve the structure of undisturbed soils on site and/or improve the quality and permeability of disturbed soils once mass grading is completed and infrastructure is installed.

Carver County Topsoil Standard

Table 1. Carver County Topsoil Standard

Requirement	Range	Test Method
Material Passing the ¾ in [19 mm]	100 %	ASTM D 422
Material passing No 4 in [4.75 mm]	≥ 85%	-
Clay	5% – 30%	ASTM D 422
Silt	5% - 35%	ASTM D 422
Sand	38% - 75%	ASTM D 422
Organic matter	3% – 15%	ASTM D 2974
pH	6.1 – 7.5	ASTM G 51
Compaction	- 1,400 kilopascals (kPa) / 200 pounds per square inch (psi) in the upper 12 inches of soil, or - bulk density of less than 1.4 grams per cubic centimeter (g/cm3) in the upper 12 inches of soil	Field test

Matching Existing Soils
For sites that have not been previously graded, a site specific topsoil standard can be developed using one of the methods described below. The site specific standard should include

Method 1 Soil Survey Data
A site specific topsoil standard can be developed using information on physical soil properties from the Natural Resource Conservation Service's Web Soil Survey for Carver County. A site specific standard shall be developed using a weighted average of the physical soil properties for the top 12 inches of soil map units identified within the project area.

Method 2 Onsite Testing
A site specific topsoil standard may be developed using onsite sampling results. One (1) sample shall be collected of the top 12 inches of soil from each soil map unit within the disturbed area of the project. Samples shall be collected and analyzed for percent clay, percent sand, percent silt, organic matter content, and pH. A site specific standard shall then be developed using a

weighted average of the samples collected on site. Sample results and the proposed site specific standard must be submitted prior to permit approval.

Stockpile Testing Requirements

One composite sample shall be collected, tested, and submitted per 2,500 cubic yards of stockpile. For sites with stockpiles less than 2,500 cubic yards, a minimum of one composite sample shall be collected, tested, and submitted.

Stockpile Sampling Procedures

1. One sample shall be collected per 2,500 cubic meters of stockpile (a minimum of one sample shall be taken if stockpiles are less than 2,500 cubic meters).
2. The Contractor/Supplier shall form a face for the full height of the stockpile at four locations.
3. A loader bucket or similar equipment shall then be filled by channeling the full height of the stockpile face, from the bottom to the top, in one operation.
4. The bucket shall then be lowered and emptied by rotation to form a small pile at each sampling location.
5. The sampler shall place a shovel full of soil from each pile into a large container. The soil shall be thoroughly mixed and a sufficient amount of mixed topsoil shall be taken to fill a standard topsoil sampling container.
6. Samples shall be submitted for analysis to lab qualified to use the following test methods: ASTM D 422, ASTM D 2974, and ASTM G 51. Samples shall be analyzed for clay, silt, sand, organic matter, and pH.
7. Additional topsoil shall not be added to the stockpile after sampling.
8. Sample results shall be submitted to the County for review. Test results are valid for 6 months.

Inplace (ungraded) Topsoil Sampling Procedures

1. The sampling procedure for inplace (ungraded) topsoil shall consist of the preparation of one composite sample for each soil map unit within the project area.
2. Each composite sample shall represent full depth topsoil from not fewer than ten individual locations per soil map unit. If the full depth is unknown, a sample from the top 6 inches of soil shall be obtained at each location.
3. The sampler shall place a shovel full of soil from each area into a large container. The soil shall be thoroughly mixed and a sufficient amount of mixed topsoil shall be taken to fill a standard topsoil sampling container.
4. Samples shall be submitted for analysis to lab qualified to use the following test methods: ASTM D 422, ASTM D 2974, and ASTM G 51. Samples shall be analyzed for clay, silt, sand, organic matter, and pH.
5. Sample results shall be submitted to the County for review.

Testing Requirements for Imported Topsoil

For imported topsoil material, test results or certification from the supplier will be acceptable methods for demonstrating compliance with the topsoil standard. If test results or certification from the supplier are unavailable, testing should be conducted per the requirements for stockpile testing (1 sample per 2,500 cubic yards of material).

Subsoil Preparation Methods

Perform subsoil preparation before placing topsoil. Perform subsoil preparation in one direction on the contours perpendicular to the flow of water and slopes flatter than 1:2 (V:H).Scarify/loosen the subsoil to a depth of 6 inches. Subsoil areas shall be loosened to less than 200 psi [1400 kPa]. For saturated soil, delay subsoil preparation until soil dries to at least field capacity.

The following areas do not require subsoil preparation:
- Areas within the dripline of existing trees,
- Over utilities within 30 in of the surface,
- Where trenching or drainage lines are installed,
- Where compaction is required by design (abutments, footings, or inslopes), and
- Inaccessible slopes.

Soil Bed Preparation Methods

Prepare the soil surface to provide a smooth, moist, and evenly textured foundation before sowing seed or placing sod. Complete the tilling after applying soil amendments to the soil. Use cultivating equipment such as disks, harrows, field diggers, or tillers capable of loosening the soil to a depth of at least 6 in on all areas except for slopes steeper than 1:2 (V:H). Till the soil surface to remove track imprints from wheeled or tracked equipment. Operate cultivating equipment on slopes at right angles to the direction of surface drainage. Soil clods, lumps, and tillage ridges 3 in [75 mm] high may remain in place for seeding operations. Soil clods, lumps and tillage ridges 1.5 inch (40 mm) high may remain in place for sodding operations. Multiple passes of the equipment may be needed to meet these requirements

Submittal Requirements

The Topsoil Management Plan shall include the following information:

(1) Topsoil Standard. This section will identify the topsoil standard being utilized for the project.

(2) Topsoil Stripping and Stockpiling Methods. This section shall include the following:

   (a) Estimated quantity of topsoil available on the site.
   (b) Quantity of topsoil needed to restore green space areas.
   (c) Estimated depth of topsoil available on the site.
   (d) Description of equipment used to strip topsoil.
   (e) Temporary methods of erosion control for topsoil stockpile (silt fence or similar).
   (f) Permanent methods of erosion control for topsoil stockpile (establishment of vegetation) if stockpile will remain in place for longer than 6 months.

(3) Topsoil Stockpile Sampling Methods. This section shall include a description of the number of samples to be collected and the process for collecting samples from the stockpile(s). One composite sample shall be collected, tested, and submitted per 2,500 cubic yards of stockpile. For sites with stockpiles less than 2,500 cubic yards, a minimum of one composite sample shall be collected, tested, and submitted.

(4) Topsoil Re-application Procedures. This section shall include the following:

   (a) Method for decompacting subsoil prior to reapplication of topsoil.
   (b) Method for re-applying stockpiled topsoil prior.

(c) General description of method(s) for amending topsoil to meet specification provided in Table 2, if testing shows stockpiles do not meet specification.

(5) Construction Schedule and Phasing. Construction sequencing shall include:

(a) Timing for stockpiling topsoil.
(b) Timing for preparing subsoil and replacing topsoil in common areas.
(c) Timing for preparing subsoil and replacing topsoil on individual lots.

(6) Plan Sheet(s) showing:

(a) Quantity of topsoil needed.
(b) Total green space area including outlots, common areas, boulevards, residential front, rear, and side lots, etc. Green space area shall be shown on plan sheet and calculation of total area shall also be provided.
(c) Location and size of stockpile(s).
(d) Location(s) where topsoil is to be reapplied.
(e) Note that topsoil must be reapplied at a depth of 6 inches and must meet the specification in Table 2.
(f) Note that topsoil quality and depth must be verified by County or City staff prior to seeding or placement of sod.

G. Selecting Vegetation

Selecting appropriate vegetation is essential for proper functioning of a stormwater BMP. Below are links to tools that can aid in selecting vegetation. **Table 1** (below) contains a list of suitable plants for infiltration/filtration areas based on soil moisture level. The Carver SWCD is available to assist in selecting regionally appropriate plants, call 952.466.5230 for more information.

Plant Selection Tools

- **Plants for Stormwater Design** (MPCA, July 2003). Copies of this guidebook are available for viewing at the Planning & Water Management Office, the SWCD Office, or online at http://www.pca.state.mn.us/yhiza85.
- The **MnDOT Seeding Manual** is available online. The following **MnDOT seeding mixtures** are recommended:
  - Mixture 33-261 – Ponds & Wet Areas
  - Mixture 34-262 – Wet Prairie
  - Link: http://www.dot.state.mn.us/environment/erosion/pdf/seedingmanual.pdf

Table 1. List of Suitable Plants for Infiltration/Filtration Areas

Wet (Basin Base)			
Common Name	**Scientific Name**	**Common Name**	**Scientific Name**
Fox Sedge	*Carex vulpinoidea*	Joe-Pye Weed	*Eupatorium maculatum*
Sweet Black Eyed Susan	*Rudbeckia subtomentosa*	Ironweed	*Vernonia fasciculata*
Common Elderberry	*Sambucus canadensis*	Dense Blazingstar	*Liatris spicata*
Blue Flag Iris	*Iris versicolor*	Boneset	*Eupatorium perfoliatum*
Swamp Milkweed	*Asclepias incarnata*	River Birch	*Betula nigra*
Redosier Dogwood	*Cornus sericea*	Highbush Cranberry	*Viburnum trilobum*
Wet Edge (Lower Side Slopes)			
Common Name	**Scientific Name**	**Common Name**	**Scientific Name**
Purple Coneflower	*Echinacea purpurea*	New England Aster	*Aster novae-angliae*
Ohio Goldenrod	*Solidago ohioensis*	Ox Eye Sunflower	*Heliopsis helinathoides*
Marsh Phlox	*Phlox glaberrima*	Culver's Root	*Veronicastrum virginicum*
Yellow Coneflower	*Ratibida pinnata*	Black Chokeberry	*Aronia melanocarpa*
Prairie Blazingstar	*Liatris pychnostachya*	Wild Quinine	*Parthenium integrifolium*
Smooth Penstemon	*Penstemon digitalis*	Blue False Indigo	*Baptisia australis*
Mesic Upland (Upper Side Slopes & Edge)			
Common Name	**Scientific Name**	**Common Name**	**Scientific Name**
Little Bluestem	*Schizachyrium scoparium*	Rattlesnake Master	*Eryngium yuccifolium*
Switch Grass	*Panicum virgatum*	Purple Prairie Clover	*Petalostemum purpureum*
Indian Grass	*Sorghastrum nutans*	Sideoats Grama	*Boutelioua curtipendula*
Stiff Goldenrod	*Solidago rigida*	Bush Honeysuckle	*Diervilla lonicera*
Black Eyed Susan	*Rudbeckia hirta*	Purple Coneflower	*Echinacea purpurea*
Bergamot	*Monarda fistulosa*	Butterfly Milkweed	*Asclepias tuberosa*

Section 2. Best Management Practice (BMP) Guidance

A. Volume Control Credit Calculations

Methods for calculating the volume reduction for a variety of BMPs are listed below. The volume control requirement can be met using a combination of practices. Other than the Amended Soils and Upland BMPs, volume credit is based upon the impervious surfaces draining to the practice. **BMPs must be built and inspected by Carver County Staff to the standards described in Section 2.D. BMP Design Guidance and Section 2.E BMP Construction Details in order to qualify for the volume credits listed below.**

Amended Soils

Calculation Method. The volume reduction for amended soils is calculated using a maximum of 0.5 inches over the amended area. Design guidance for amending soils is available in Sections 2D and 2E.

Bioretention with 3 feet of vertical separation

Calculation Method. The volume reduction for bioretention is calculated as 40% of the ponded volume. Construction details for bioretention practices are available in Sections 2D and 2E. No volume credit will be given for bioretention practices within 3 feet of vertical separation from the seasonally high groundwater or sited immediately adjacent to wet ponds and/or bioretention practices controlled by the same outlet as a wet pond (e.g. bioretention shelves or benches).

Stormwater Reuse (irrigation).

Calculation Method. To meet the volume requirement, the volume to be retained onsite must be utilized on site once per week for a period of 20 weeks during the growing season. The volume reduction for stormwater reuse is calculated by the area irrigated times the irrigation rate, with limits based upon area draining to the storage area and storage volume. Refer to Section 2D for total stormwater reuse volume reduction credits.

Preservation or Restoration of Upland Vegetation.

Calculation Method. The volume reduction for preservation or restoration of upland vegetation is calculated using a maximum of 0.5 inches over the amended area. Design guidance is available in Section 2D.

Green Roof.

Calculation Method. The area of the green roof is excluded from the total impervious calculation, thereby reducing the total treatment volume. Design guidance is available in Section 2D.

Pervious Pavement.

Calculation Method. The volume reduction for pervious pavement is calculated as 50% of the volume below the tile outlet elevation (assumes 50% pore space below tile). The area of pervious pavement is also excluded from the total impervious calculation. Construction details for pervious pavement are available in Sections 2D and 2E.

Infiltration.
Calculation Method. The volume retained is calculated as 80% of the ponded volume.

Disconnecting Impervious Surfaces.
Calculation Method. Volume reduction for disconnecting impervious surface is dependent upon the pervious area being routed to and must have amended soils to receive volume reduction credits. Volume reduction is 0.5 inches over the area of amended soils, with a maximum width equal to the flow path. Impervious areas must be discharging to the amended soils as a uniform sheet flow, with a max flow path of 100 feet.

NOTES.

1. Combinations of the above practices can be used to meet the volume control requirement.
2. A calculator is available on the Carver County website (http://www.co.carver.mn.us/home/showdocument?id=5871) for use in determining whether or not the requirements have been met.

B. Water Quality Credit Calculations

Water quality requirements can be met using a combination of practices. The given removal percentages for TP are listed below, as sites meet the phosphorus requirement, they will also meet the TSS requirement. **BMPs must be built to the standards described in Section 2.D. BMP Design Guidance and Section 2.E BMP Construction Details in order to qualify for the water quality credit listed below.**

Pond (NURP)
Calculation Method. For stormwater ponds designed to meet NURP design criteria (2.5 inches over the entire watershed draining to the pond), 60% TP removal and 80% TSS removal can be assumed for the ponded volume.

Pond (NURP) with Filtration
Calculation Method. For stormwater ponds designed to meet NURP design criteria (2.5 inches over the entire watershed draining to the pond) and include either a filtration bench or filtration shelf, 90% TP removal and 90% TSS removal can be assumed for the ponded volume and filtered volume.

Pond (MN Stormwater Manual)
Calculation Method. For stormwater ponds designed to meet MN Stormwater Manual (1,800 cubic feet of dead storage per acre of watershed draining to the pond), 40% TP removal and 65% TSS removal can be assumed for the ponded volume.

Pond (MN Stormwater Manual) with Filtration
Calculation Method. For stormwater ponds designed to meet MN Stormwater Manual (1,800 cubic feet of dead storage per acre of watershed draining to the pond) and includes either a filtration bench or a filtration shelf, 75% TP removal and 80% TSS removal can be assumed for the ponded volume.

Bioretention/Filtration
Calculation Method. Bioretention basins designed to meet the design criteria in the Carver County BMP Guidelines, 75% TP removal and 90% TSS removal can be assumed for the volume filtered.

Iron-enhanced Sand Filter
Calculation Method. For iron-enhanced filtration systems designed to meet design criteria in the Carver County BMP Guidelines, 90% TP and TSS removal can be assumed for the volume filtered.

Infiltration
Calculation Method. 100% TP and TSS removal can be assumed for the volume naturally infiltrating.

Hydrodynamic Separator
Calculation Method. TSS removal is 50% of the watershed being treated by the device. No credit is given for TP removal.

Disconnecting Impervious surfaces

Calculation Method. 45% TP reduction and 75% TSS reduction with a maximum area equal to the area of impervious area discharging to the pervious area. Discharge must be uniform sheet flow with a max flow path of 100 feet.

Notes.

1. Combinations of the above practices can be used to meet the water quality requirement.
2. A calculator is available on the Carver County website (http://www.co.carver.mn.us/home/showdocument?id=5871) for use in determining whether or not the requirements have been met.

C. BMP Design Guidance

The following construction design guidance are included here for reference. **BMPs must be built to these standards in order to qualify for the water quality and volume credits described in the Rules.**

Alternative designs may be approved if, upon review, the county determines the design will provide treatment equal to or greater than the practices described in this appendix. Applicants wishing to utilize an alternative design must submit plans and specifications for the proposed design along with calculations showing compliance with the stormwater standards of Carver County Ordinance Chapter 153. Calculations should be generated using industry standard models.

Design guidance is provided for the following BMPs:

1) Amended Soil
2) Green Roof
3) Stormwater Reuse
4) Preservation or Restoration of Upland Vegetation
5) Pond Bioretention Bench or Shelf
6) Disconnecting Impervious Surfaces
7) Hydrodynamic Separators

1) Amended Soil Design Guidance

Purpose

The purpose of amending soil is to decrease the volume and rate of runoff by enhancing soil absorption and plant uptake capacity. A secondary benefit of amending soils with compost is that the need to fertilize turf at compost amended sites is reduced or eliminated. The methods below were created after a review of information from Iowa Stormwater Manual, Minnesota Stormwater Manual, EPA office of Research and Development, Seattle, WA literature and existing MNDOT specifications.

Calculation Method

The volume reduction is calculated using a maximum of 0.5 inches over the amended area.
The rate of runoff reduction for the amended area can be reduced by upgrading the Hydrologic Soil Group (HSG) condition of the soil group from Type C to B. This adjustment under model runs for proposed conditions may reduce the "bounce" in the pond for the site.

Eligible Areas

Areas of passive green space are eligible for the amended soils volume credit. Areas of active green space (yards, playing fields, etc) are not eligible. Areas within existing setbacks, defined either by County or LGU Ordinance are not eligible.

Design Guidance

<u>Approved Construction Materials</u>
Compost: Mature compost from yard waste is preferred over manure compost for increasing soil infiltration rates. Table 1 from the Minnesota Stormwater Manual summarizes recommended compost qualities.
Topsoil: imported topsoil shall meet Carver County Topsoil Specifications.

<u>Construction Methods</u>
Amended soils can be achieved either by modifying existing soil and/or importing equivalent. Soil testing may be necessary to document the qualities of imported topsoil and compost.

a. Amending undisturbed soils. Till soil to a depth of 10-16 inches using rip-type tillage equipment. Prior to tilling, perform plasticity test to determine soil moisture content. Installation must stop if smearing and compaction is occurring due to wet soils. Apply 2-3 inches of compost to existing top soil and re-till to a depth of 8 inches.

b. Amending disturbed soils.
   i. Prepare subgrade -- Before replacement of topsoil, apply 1 inch of compost over subsoil. Till to a minimum depth of 6 to 10 inches using rip-type tillage equipment. Prior to tilling, perform plasticity test to determine soil moisture content. Installation must stop if smearing and compaction is occurring due to wet soils.
   ii. Amended Soils -- Incorporate compost in the replaced topsoil at a rate of 2 inches of compost per 6 inches total of topsoil. Any additional imported topsoil shall meet Carver County Topsoil specifications.

c. Construction Plans.

i. Construction plans should include detail of soil amendment methods chosen for site (see details section for example soil amendment detail)
ii. Construction plans should clearly show the location to be amended and should refer to detail chosen for site.
iii. Construction plans should also include the following note:
Contractor shall submit an Amended Soils Work Plan to Carver County SWCD staff at preconstruction meeting. Amended Soils Work Plan shall include information on method, equipment to be used, phasing, name of restoration subcontractor, and other information relevant to ensuring the goal of the amended soils will be met. Final approval will not be granted without satisfactory amended soils work plan.

2) Green Roof Design Guidance

Purpose
Use of a green roof is an option for sites that have space limitations for other BMPs. In addition to the automatic removal of the roof area from total impervious calculations, green roofs help with stormwater rate control and help with energy efficiency of the building.

Calculation Method
The area of the green roof is excluded from the total impervious calculation, thereby reducing the total treatment volume.

Design Guidance
Please see the Minnesota Stormwater Manual for information on designing a green roof:
http://stormwater.pca.state.mn.us/index.php/Green_roofs

3) Stormwater Reuse Design Guidance

Purpose

Stormwater reuse's purpose is use collected stormwater as an irrigation source. A secondary benefit of using stormwater for irrigation is the reduction in potable water being used as a water source for turf grass.

Calculation Methods

Volume Requirement – To use stormwater reuse to meet the volume requirement, the volume retained (0.5 inches from the site impervious area) must be utilized on site once per week for a period of 20 weeks during the growing season. Volume reduction is based upon irrigation rate, irrigation area, impervious surface area routed to the storage facility, and the storage volume. See below for further discussion on calculation of the total volume reduction credit.

Design Guidance

Irrigation Rate. The accepted irrigation rate is a maximum of 2 inches per week for a period of 20 weeks during the growing season (May through September). Higher or more frequent irrigation rates may be allowed when irrigating undisturbed or protected upland vegetation, or when irrigating on areas with amended soils.

Irrigation Area. Acceptable irrigation areas include those that are outside of any LGU Ordinance defined setbacks for sensitive areas, such as steep slope setbacks and wetland setbacks. Side slopes of ponds are not eligible to be considered within the irrigation area.

Volume Reduction Credit. Credit given will be limited based upon the irrigation area, amount of impervious area draining to the storage structure, and storage limits. If the irrigation area is less than the impervious area draining, then the credit will be irrigation rate times the irrigation area. If the irrigation area is more than the impervious area, then credit is equal to 0.5 inches over the impervious area. The maximum credit given will be 4 week storage volume of a pond or 1 week storage volume of an underground system. Credit cannot be overlapped with other volume BMPs, such as irrigating amended soils or in Upland Vegetation.

Usage Meter. The applicant shall install a usage meter for monitoring water usage. The meter shall be in an area accessible to CCWMO staff.

Stormwater Reuse Plan Sheet. Applicants shall submit a stormwater reuse plan sheet with the following information:

1. Area to be irrigated
2. Area draining to storage structure
3. Location of reuse system components
   - Location of pump
   - Location of intake from pond
   - Location of usage meter
   - Location of potable connection (if using)
   - Location of backflow prevention devices (if using)
   - Location and type of filters (if using)

- Location of debris collection sumps (if using)

4. Narrative describing operation of system
5. Location of access for maintenance activities
6. Drawdown elevation of pond
7. Volume reduction and/or water quality calculation
8. Other information relevant to the reuse system

Pond Calculations. Pond volumes must be submitted to verify a minimum depth of four feet remains after irrigation quantity is used. The pond shall provide for the storage of at least 4 times the credit received. Pond storage is the volume between the "off" elevation and either the normal water level or the drawdown level of a filtration shelf or trench. The stormwater reuse plan sheet shall also include a cross section or otherwise indicate what the drawdown elevation will be for the pond. Identify the 'ON' elevation at an elevation that provides for one complete irrigation cycle per required volume. To provide a tolerance for the equipment, this elevation should be at least 0.5 feet above 'OFF' elevation.

Maintenance. A maintenance plan and inspection checklist for the stormwater reuse system shall be developed and incorporated into the maintenance plan for the site. The maintenance plan for the reuse system shall include, but is not limited to, the following:

1. Clearly identifies entity with responsibility for maintaining the reuse system.

2. Acknowledgement that the stormwater reuse system must remain in place in perpetuity or equivalent water quality and volume reduction treatment must be provided if it is to be replaced or if its use is to be discontinued.

3. Inspection schedule with the following activities:

   - Inspect entire collection system and clean winter debris accumulation at start of spring snowmelt
   - Inspect entire collection system and clean accumulated debris in fall prior to winter operations or seasonal shut-down
   - Conduct additional inspections and cleaning of filters as recommended by manufacturer
   - Other activities as appropriate for the system

4. A copy of the Stormwater Reuse Plan Sheet (see above for additional information).

5. Pump manufacturer and maintenance information.

Review of Stormwater Reuse System Design. Prior to selecting a contractor for the construction of the irrigation/stormwater reuse system, the CCWMO must review and approve the design specs for the reuse system. This is to ensure that the designed system is capable of distributing enough water to meet the volume reduction requirement for the site. Below are submittal requirements for review.

1. Provide a system text summary, (typically in cover letter) and includes
   a. Volume required
   b. Area
   c. Inches per week applied (typically 1" to 2" per week)

2. A site plan that shows storage location, the pipe network and irrigation reuse areas, pump location and electrical source
    a. Show the contributing area has sufficient runoff to fill the pond or tank

3. Pond or Tank Storage
    a. Pond volume can be taken from HydroCAD model
    b. Pond should hold a minimum volume equivalent to 4 weeks of irrigation
    c. Provide pond cross section with water level elevations (max drawdown level must leave 4' of water in the pond)
    d. Tank manufacturer and dimensions needed
        i. Storage volume is reduced by sediment storage
        ii. Tank should hold a minimum volume equivalent to 1 week of irrigation.

4. Provide a distribution plan
    a. Show number of heads
        i. Provide the spec for individual heads
    b. Show and label irrigation zones.
    c. Watering schedule

5. Pump
    a. Submit pump manufacturer, model number, and pump curve
    b. Power requirements
    c. Operating pressure
    d. Pump on/pump off elevations

6. Backup Supply
    a. Water meter size, service main size and flow and pressure available.
    b. Backflow preventer
    c. Separate water meter from the pump supply meter
    d. Letter of approval from the City that they will allow a stormwater reuse system to connect "touch" the municipal supply. Not all municipalities have code that allow this.

Additional Resources. Review the Metropolitan Council's Stormwater Reuse Guide for information on designing a reuse system:
http://www.metrocouncil.org/environment/WaterSupply/STORMWATER%20REUSE%20GUIDE_2012.zip

4) Preservation or Restoration of Upland Vegetation Design Guidance

Purpose

The purpose of preserving or restoring pervious upland areas (prairie, woodland, forest) is to decrease the volume and rate of runoff by preserving soil absorption and plant uptake.

Calculation Method

The volume reduction is calculated using a maximum of 0.5 inches over the area preserved or restored.

Design Guidance

The area to be preserved should consist of existing trees or predominantly native vegetation. Areas to be restored must be restored to predominantly native vegetation. Areas that are within steep slope setbacks with no disturbance and areas within a wetland setback will not be eligible for this BMP. A vegetation planting and maintenance plan must be submitted for review. Credit will not be given if applied in the same area as other volume BMPs, such as Stormwater Reuse or Amended Soils.

The area to be preserved must be placed under easement to ensure that it continues to provide treatment in perpetuity.

5) Pond Bioretention Bench or Bioretention Shelf Design Guidance

Purpose

The purpose of a filtration bench or shelf as an addition to a Pond is to provide treatment for the remaining 30% Water Quality treatment.

Calculation Method

The water quality volume and associated tile length is calculated as the total volume of a 0.5 foot drawdown from the Normal Water Level. In retrofit situations, if constructing a filtration bench is constrained, a minimum of 50 linear feet or 150 square feet is required.

Design Guidance

The system should be designed to allow for a 0.5 foot drawdown from the Normal Water Level. All tile lines need to have a positive slope of 0.5% to the outlet.

6) Disconnecting Impervious Surface Design Guidance

Purpose

Disconnecting impervious surfaces, or specifically routing stormwater to vegetation, allows for sheet flow to be treated by vegetation.

Calculation Method

45% TP reduction and 75% TSS reduction with a maximum area equal to the area of impervious area discharging to the area. Discharge must be uniformed sheet flow with a max flow path of 100 feet. If the pervious area is amended soils, then the volume reduction is 0.5 inches over the amended soils equal to the area of impervious surface draining to the area.

Design Guidance

Credit for both Water Quality and Volume Reduction is based upon a one to one ratio, meaning that the maximum area for pervious is equal to the area of the impervious area discharging to the green area. Flow paths over impervious surfaces also cannot be greater than 100 feet and of a uniform sheet flow. It is recommended that native plantings be used for these areas.

7) Hydrodynamic Separator Design Guidance

Purpose

Hydrodynamic separators will need to be used in situations when other BMPs cannot be located in subwatersheds draining directly to a water body. These devices remove particles from stormwater, reducing TSS loading to downstream water bodies.

Calculation Method

TSS reduction is 50% of the watershed being treated by the device. No TP reduction will be credited for this type of BMP.

Design Guidance

Submit design information showing structure is sized for a 100 micron particle and for the inflow pipe. At a minimum the device should be sized for 12-inch pipe capacity or 2 year event flow.

D. BMP Construction Details

The following construction detail plates are included here for reference. **BMPs must be built to these standards in order to qualify for the water quality and volume credits described in the Rules.**

Alternative designs may be approved if, upon review, the county determines the design will provide treatment equal to or greater than the practices described in this appendix. Applicants wishing to utilize an alternative design must submit plans and specifications for the proposed design along with calculations showing compliance with the stormwater standards of Carver County Ordinance Chapter 153. Calculations should be generated using industry standard models.

Construction detail plates are provided for the following BMPs:

- Amended Soil
- Bioretention
    - Basin
    - Bench
    - Shelf
    - Swale
    - Trench
    - Offline Basin
    - Outlet
- Pervious Pavement
- Iron-Enhanced Sand Filter

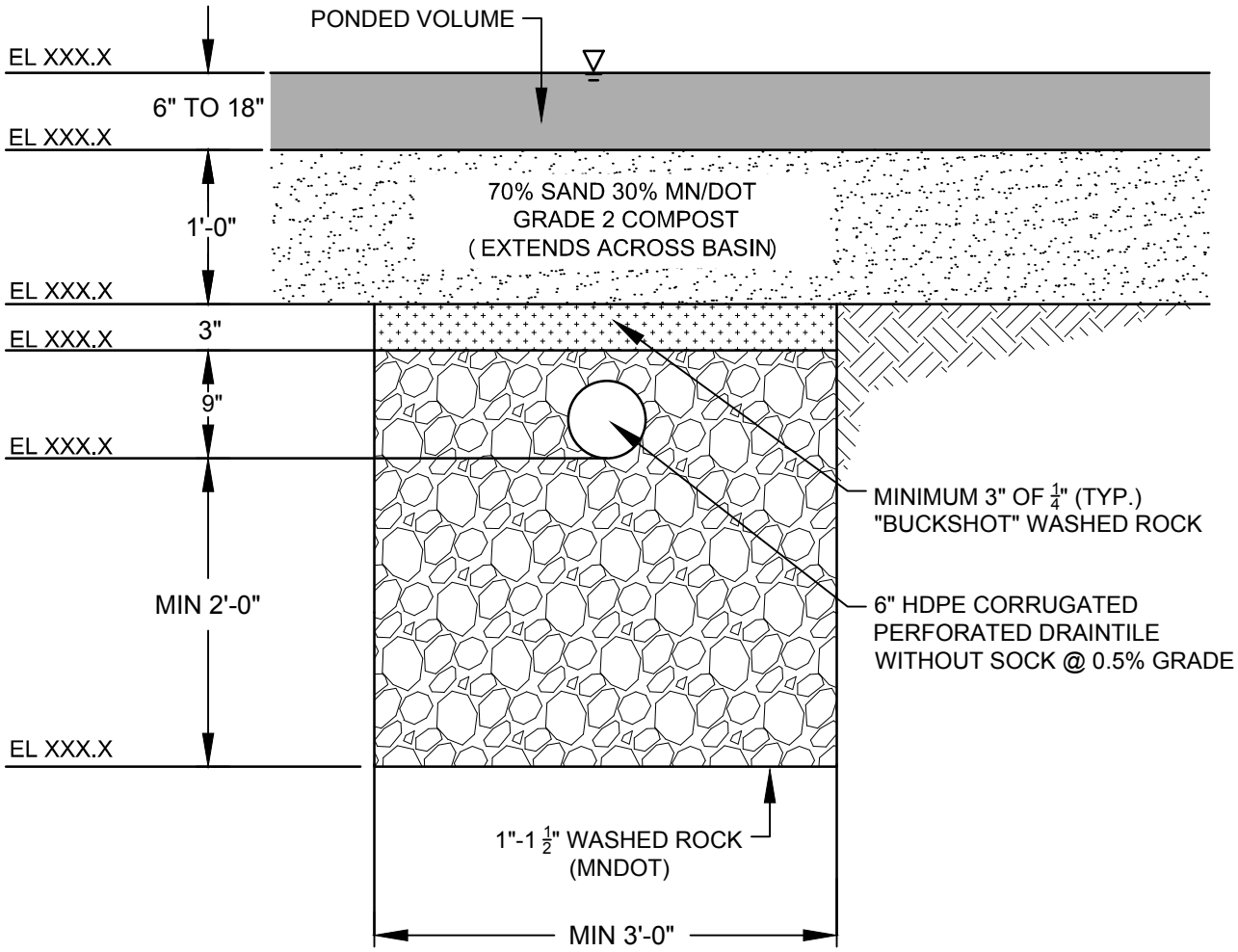

CALCULATIONS TO MEET RULES

VOLUME:

1. VOLUME REDUCTION IS CALCULATED AS 40% OF PONDED VOLUME.
2. IF NO VEGETATION IS PROVIDED, THE VOLUME CALCULATION IS LOWERED TO 50% OF ROCK VOLUME BELOW TILE.
3. TILE INVERT MUST BE 3 FT ABOVE DOWNSTREAM NWL, GROUNDWATER, BEDROCK, ETC.

WATER QUALITY:

1. FILTRATION IS CALCULATED AS 75% TP REMOVAL AND 90% TSS REMOVAL.

DRAWDOWN:

1. 48 HOUR DRAWDOWN OF BMPS IS REQUIRED. TO DETERMINE LENGTH OF TRENCH NEEDED, USE FILTRATION RATE OF 50 CF OF PONDED VOLUME WILL PASS THROUGH ONE LINEAR FOOT OF 3' WIDE TRENCH, OR 17 CF OF PONDED VOLUME PER SF OF SURFACE AREA.

CARVER COUNTY	WENCK ASSOCIATES Responsive partner. Exceptional outcomes.	BIORETENTION TRENCH	DEC 2016 DETAIL 1

M:\1097\GENERAL DETAILS\December 2016 Details\1-BIORETENTION TRENCH.dwg

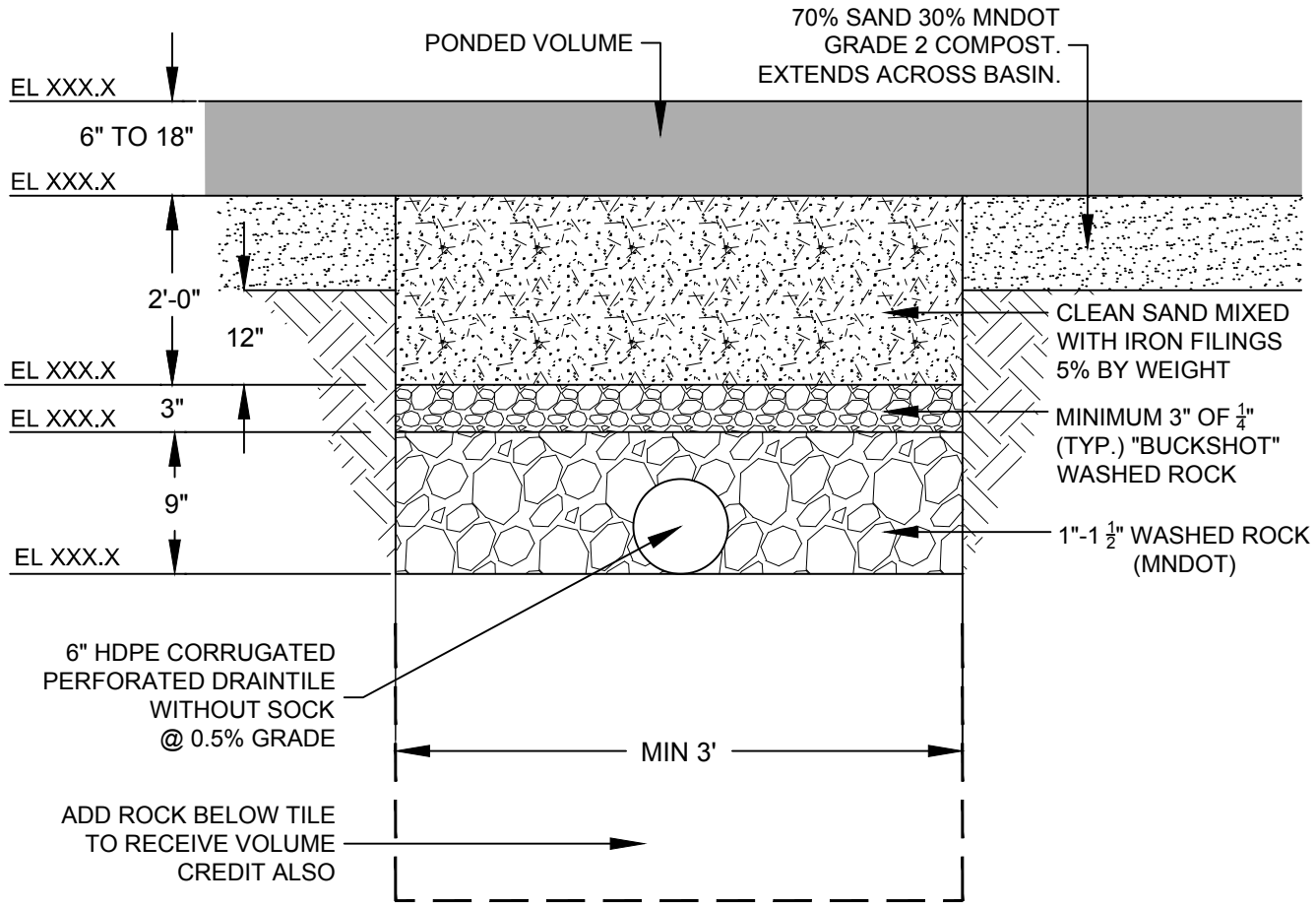

CALCULATIONS TO MEET RULES

VOLUME:

1. VOLUME REDUCTION IS CALCULATED AS 40% OF PONDED VOLUME.
2. TO RECEIVE VOLUME CREDIT, ADD 2 FEET OF ROCK BELOW TILE PER DETAIL 6.
3. IF NO VEGETATION IS PROVIDED, THE VOLUME CALCULATION IS LOWERED TO 50% OF ROCK VOLUME BELOW TILE.
4. TILE INVERT MUST BE 3 FT ABOVE DOWNSTREAM NWL, GROUNDWATER, BEDROCK, ETC.

WATER QUALITY:

1. IRON ENHANCED FILTRATION IS CALCULATED AS 90% TP REMOVAL AND 90% TSS REMOVAL.

DRAWDOWN:

1. 48 HOUR DRAWDOWN OF BMPS IS REQUIRED. TO DETERMINE LENGTH OF TRENCH NEEDED, USE FILTRATION RATE OF 50 CF OF PONDED VOLUME WILL PASS THROUGH ONE LINEAR FOOT OF 3' WIDE TRENCH, OR 17 CF PER SF OF SURFACE AREA. RETROFITS USE MINIMUM OF 150 SF.

IRON FILINGS:

1. AMOUNT OF FILINGS CAN BE DETERMINED BY CALCULATING TOTAL SAND NEEDED TO FILL THE TRENCH, AND MULTIPLYING BY 5%.
2. SAND IRON NEEDS TO BE PRE-MIXED PRIOR TO INSTALLATION. CAN OCCUR OFF SITE.
3. IRON FILINGS MUST BE CLEANED AND WASHED. PROVIDE SUPPLIER INFORMATION TO WMO. NO OIL OR GREASE ALLOWED.

CARVER COUNTY	WENCK ASSOCIATES Responsive partner. Exceptional outcomes.	IRON ENHANCED SAND FILTER	DEC 2016 DETAIL 2

M:\1097\GENERAL DETAILS\December 2016 Details\2-IRON ENHANCED SAND FILTER.dwg

UNDISTURBED SOILS

A TILL OR RIP SOIL TO A DEPTH OF 12 INCHES USING RIP-TYPE TILLAGE EQUIPMENT. DURING TILLING, INSTALLATION MUST STOP IF SMEARING AND COMPACTION IS OCCURRING.

B APPLY 2 TO 3 INCHES OF COMPOST TO EXISTING TOPSOIL AND RE-TILL TO A DEPTH OF 8 INCHES

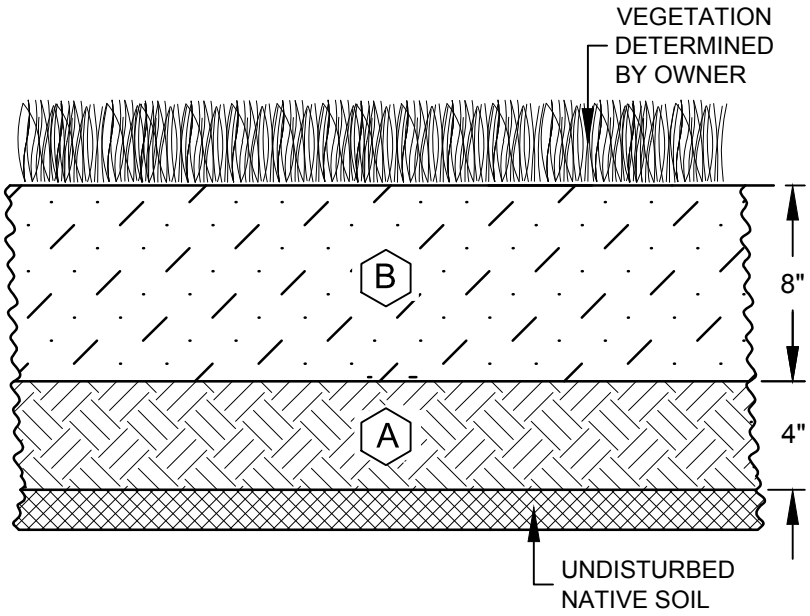

DISTURBED SOILS

C BEFORE REPLACEMENT OF ANY TOPSOIL, APPLY 1 INCH OF COMPOST OVER SUBSOIL. TILL TO A MINIMUM DEPTH OF 12 INCHES USING RIP-TYPE TILLAGE EQUIPMENT. DURING TILLING, INSTALLATION MUST STOP IF SMEARING AND COMPACTION IS OCCURRING.

D INCORPORATE COMPOST IN THE TOPSOIL AT A RATE OF 2 INCHES OF COMPOST PER 6 INCHES TOTAL OF TOPSOIL. ALL TOPSOIL SHOULD MEET CARVER COUNTY SPEC.

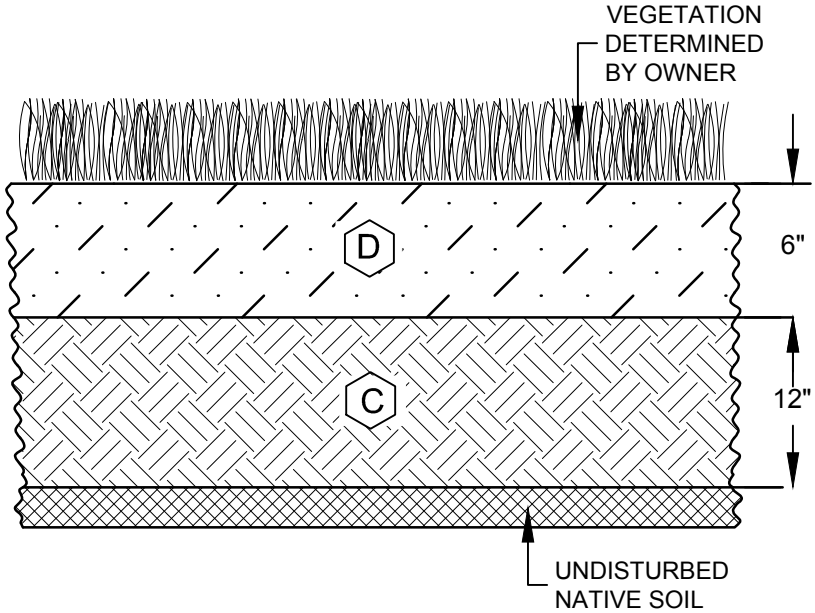

NOTE: CONTRACTOR SHALL SUBMIT AN AMENDED SOILS WORK PLAN TO WMO REPRESENTATIVE AT PRECONSTRUCTION MEETING. AMENDED SOILS WORK PLAN SHALL INCLUDE INFORMATION ON METHOD, EQUIPMENT TO BE USED, PHASING, NAME OF RESTORATION SUBCONTRACTOR, AND OTHER INFORMATION RELEVANT TO ENSURING THE GOAL OF THE AMENDED SOILS WILL BE MET. FINAL APPROVAL WILL NOT BE GRANTED WITHOUT SATISFACTORY AMENDED SOILS WORK PLAN.

CARVER COUNTY	WENCK ASSOCIATES Responsive partner. Exceptional outcomes.	AMENDED SOILS	DEC 2016 DETAIL 3

M:\1097\GENERAL DETAILS\December 2016 Details\3-AMENDED SOILS.dwg

PLAN VIEW

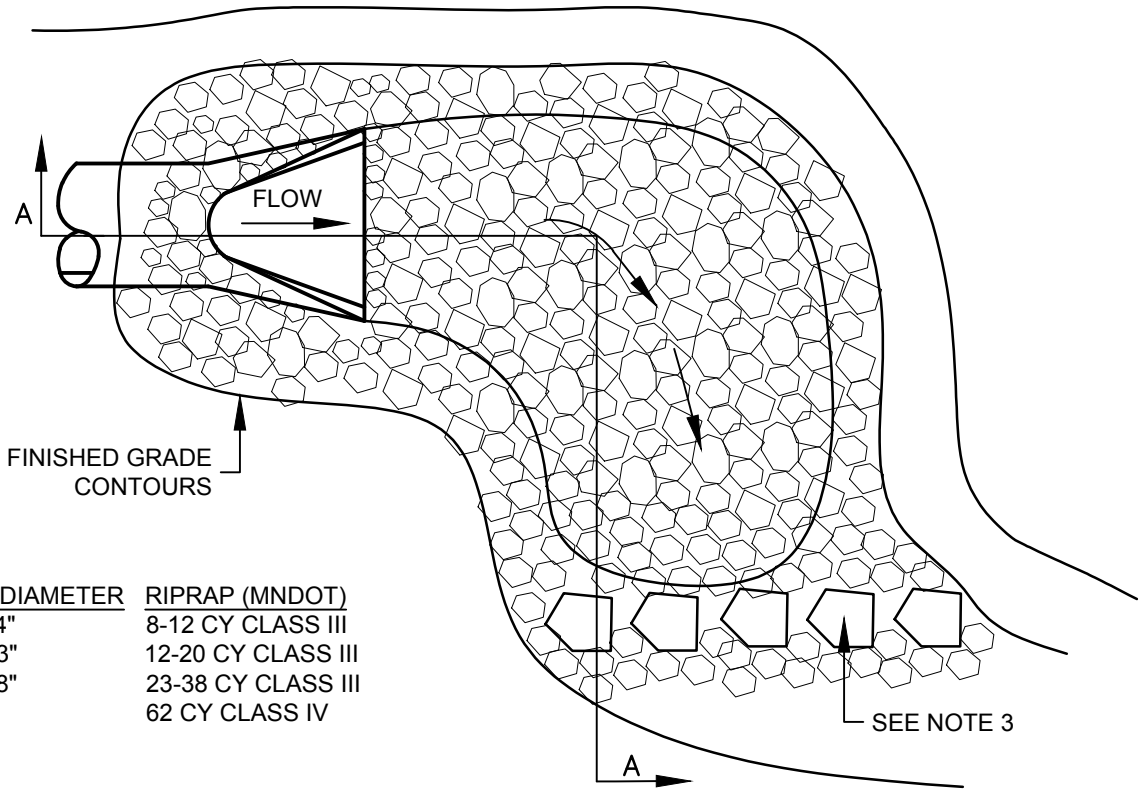

PIPE DIAMETER	RIPRAP (MNDOT)
12"-24"	8-12 CY CLASS III
27"-33"	12-20 CY CLASS III
36"-48"	23-38 CY CLASS III
>54"	62 CY CLASS IV

SECTION A-A

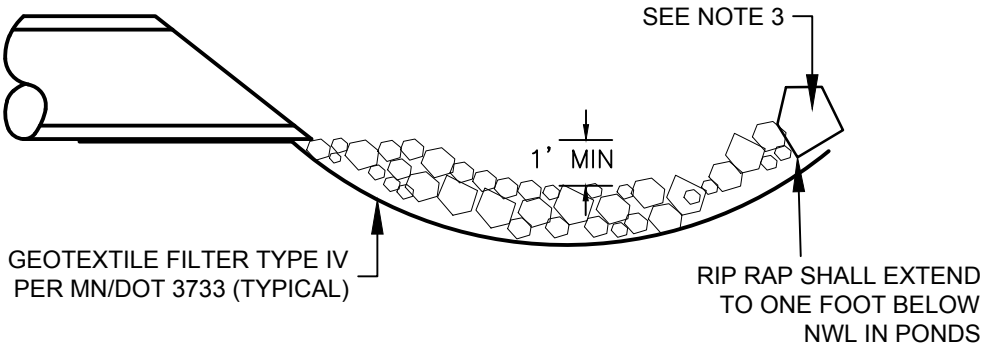

NOTES

1. REVIEW RIP RAP LAYOUT WITH COUNTY STAFF IN FIELD PRIOR TO INSTALLATION.
2. CONFORM RIP RAP TO EXISTING SLOPES AND FLOWPATH, OR AS DIRECTED BY COUNTY STAFF. RIP RAP SHALL EXTEND TO MEET 1 FOOT OR 1D ABOVE INVERT ON OUTSIDE CONTOUR.
3. ENERGY DISSIPATION ROCKS SHALL BE ANGULAR STONE TWICE THE PIPE DIAMETER UP TO A MAXIMUM 36" DIAMETER
4. LENGTH OF RIP RAP SHALL BE A MINIMUM LENGTH OF 5 PIPE DIAMETERS.

CARVER COUNTY	WENCK ASSOCIATES Responsive partner. Exceptional outcomes.	MODIFIED RIPRAP TO CHANNEL CONFIGURATION	DEC 2016
			DETAIL 4

M:\1097\GENERAL DETAILS\December 2016 Details\4-MODIFIED RIPRAP TO CHANNEL CONFIGURATION.dwg

PLAN VIEW

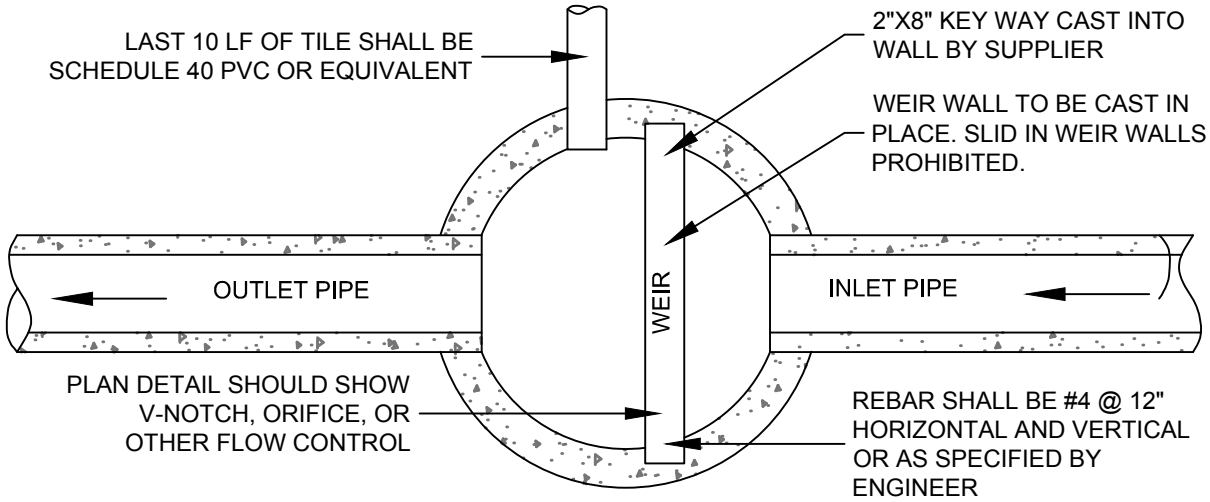

SECTION

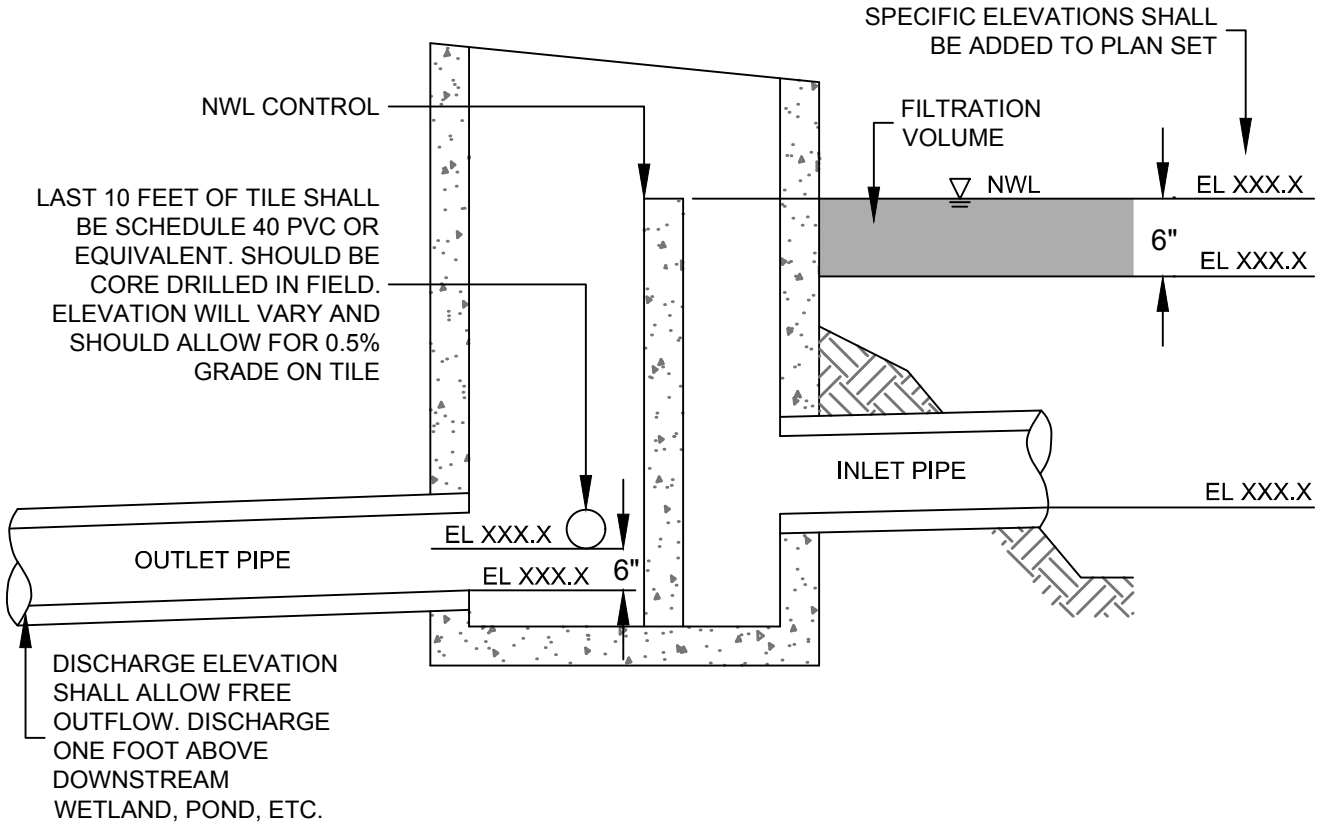

CARVER COUNTY	WENCK ASSOCIATES Responsive partner. Exceptional outcomes.	OUTLET STRUCTURE	DEC 2016 DETAIL 5

M:\1097\GENERAL DETAILS\December 2016 Details\5-OUTLET STRUCTURE.dwg

PLAN VIEW

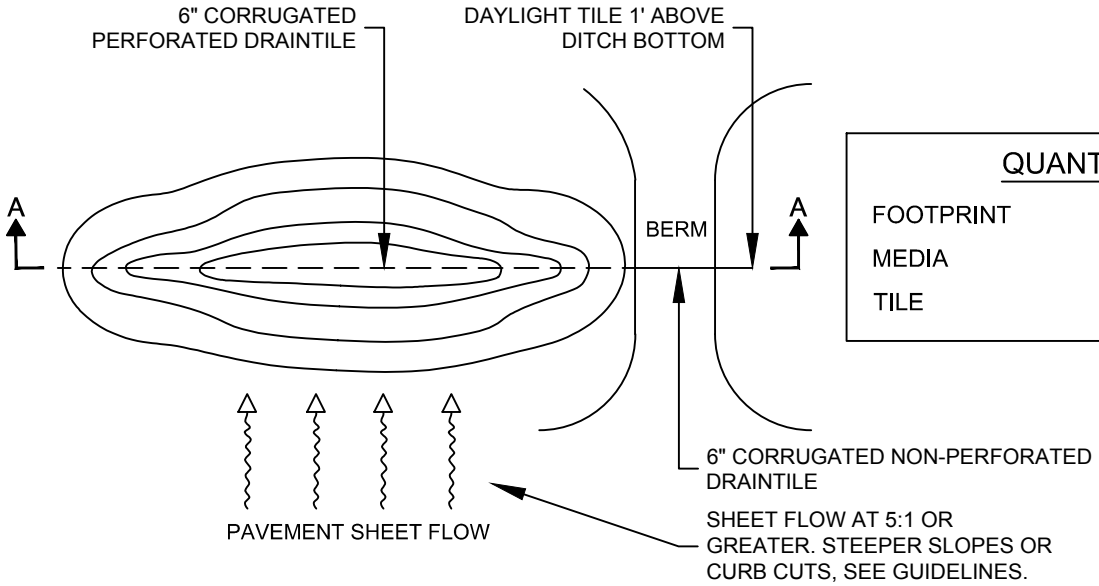

QUANTITIES

FOOTPRINT	_____	SF
MEDIA	_____	CY
TILE	_____	LF

SECTION A - A

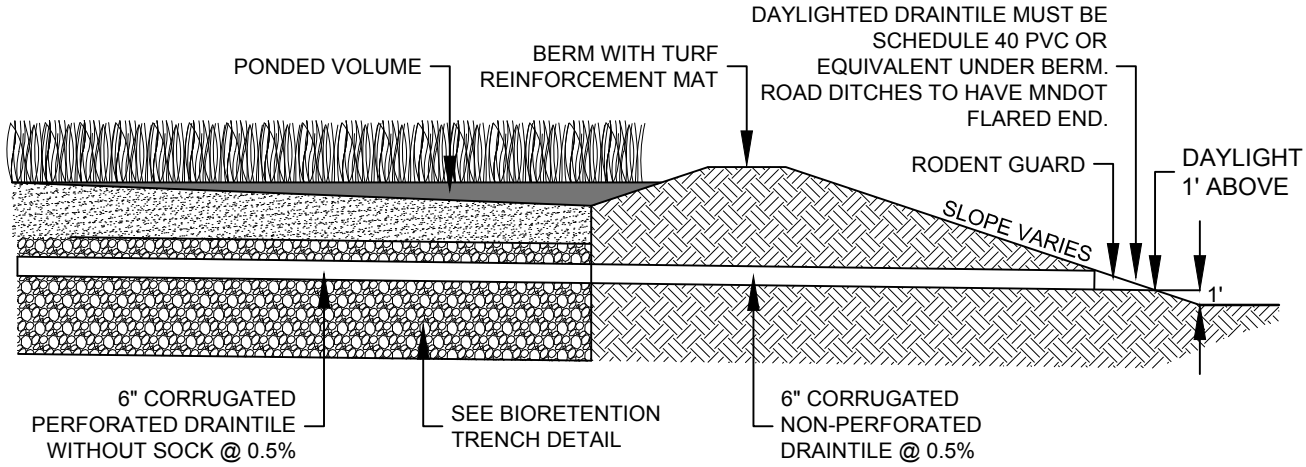

CALCULATIONS TO MEET RULES

VOLUME:

1. VOLUME REDUCTION IS CALCULATED AS 40% OF PONDED VOLUME.
2. TO RECEIVE VOLUME CREDIT, ADD 2 FEET OF ROCK BELOW TILE PER DETAIL 1.
3. IF NO VEGETATION IS PROVIDED, THE VOLUME CALCULATION IS LOWERED TO 50% OF ROCK VOLUME BELOW TILE.
4. TILE INVERT MUST BE 3 FT ABOVE DOWNSTREAM NWL, GROUNDWATER, BEDROCK, ETC.

WATER QUALITY:

1. FILTRATION IS CALCULATED AS 75% TP REMOVAL AND 90% TSS REMOVAL.

DRAWDOWN:

1. 48 HOUR DRAWDOWN OF BMPS IS REQUIRED. TO DETERMINE LENGTH OF TRENCH NEEDED, USE FILTRATION RATE OF 50 CF OF PONDED VOLUME WILL PASS THROUGH ONE LINEAR FOOT OF 3' WIDE TRENCH, OR 17 CF PER SF OF SURFACE AREA. RETROFITS USE MINIMUM OF 150 SF.

CARVER COUNTY	WENCK ASSOCIATES Responsive partner. Exceptional outcomes.	BIORETENTION SWALE	DEC 2016
			DETAIL 6

M:\1097\GENERAL DETAILS\December 2016 Details\6-BIORETENTION SWALE.dwg

PLAN VIEW

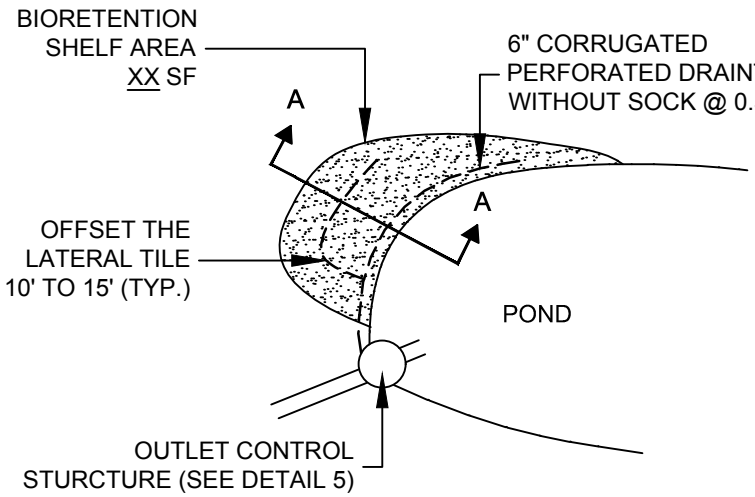

QUANTITIES

SHELF AREA	_____	SF
MEDIA	_____	CY
TILE	_____	LF

SECTION A-A

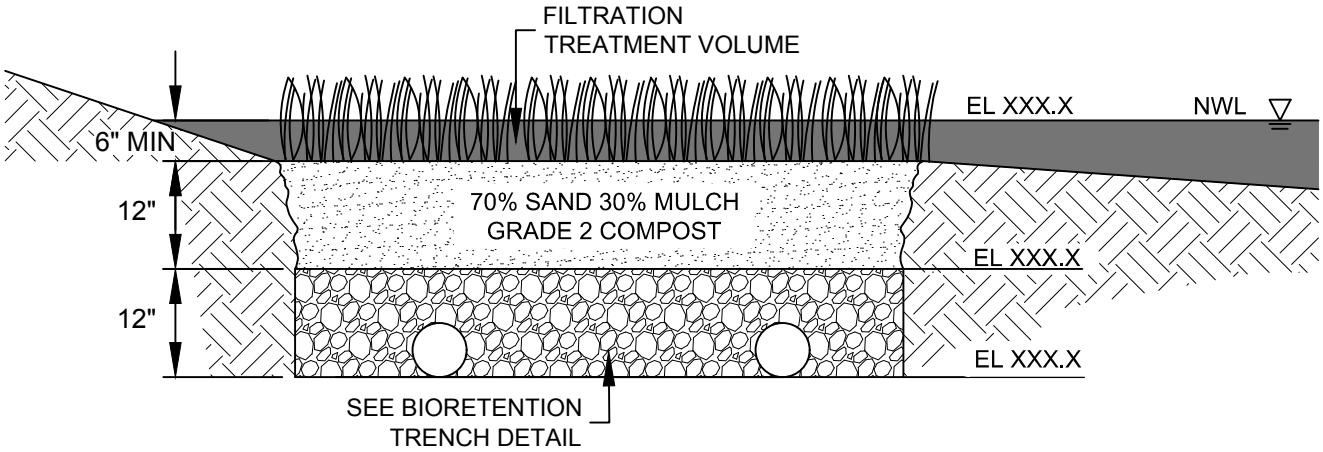

CALCULATIONS TO MEET RULES

VOLUME:

1. NO VOLUME REDUCTION IS GIVEN FOR FILTRATION SHELF.

WATER QUALITY:

1. TP CREDIT IS 60% FOR NURP VOLUME AND 75% FOR FILTRATION VOLUME. TSS CREDIT IS 80% FOR NURP VOLUME AND 90% FOR FILTRATION VOLUME

DRAWDOWN:

1. TO DETERMINE LENGTH OF TRENCH NEEDED, USE FILTRATION RATE OF 50 CF OF PONDED VOLUME WILL PASS THROUGH ONE LINEAR FOOT OF 3' WIDE TRENCH, OR 17 CF OF PONDED VOLUME PER ONE SF OF SURFACE AREA.

CARVER COUNTY	WENCK ASSOCIATES Responsive partner. Exceptional outcomes.	BIORETENTION SHELF	DEC 2016
			DETAIL 7

M:\1097\GENERAL DETAILS\December 2016 Details\7-BIORETENTION SHELF.dwg

PLAN VIEW

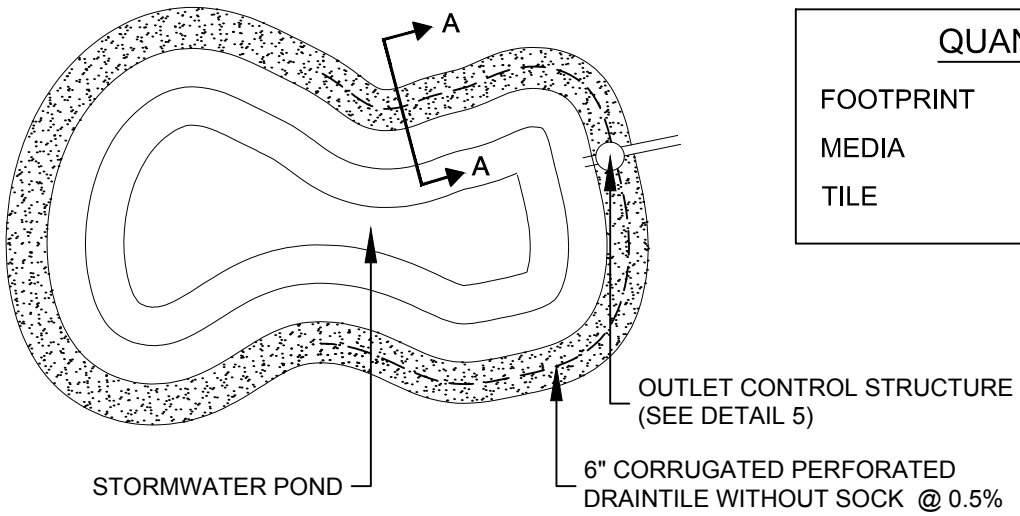

QUANTITIES

FOOTPRINT	_____	SF
MEDIA	_____	CY
TILE	_____	LF

SECTION A - A

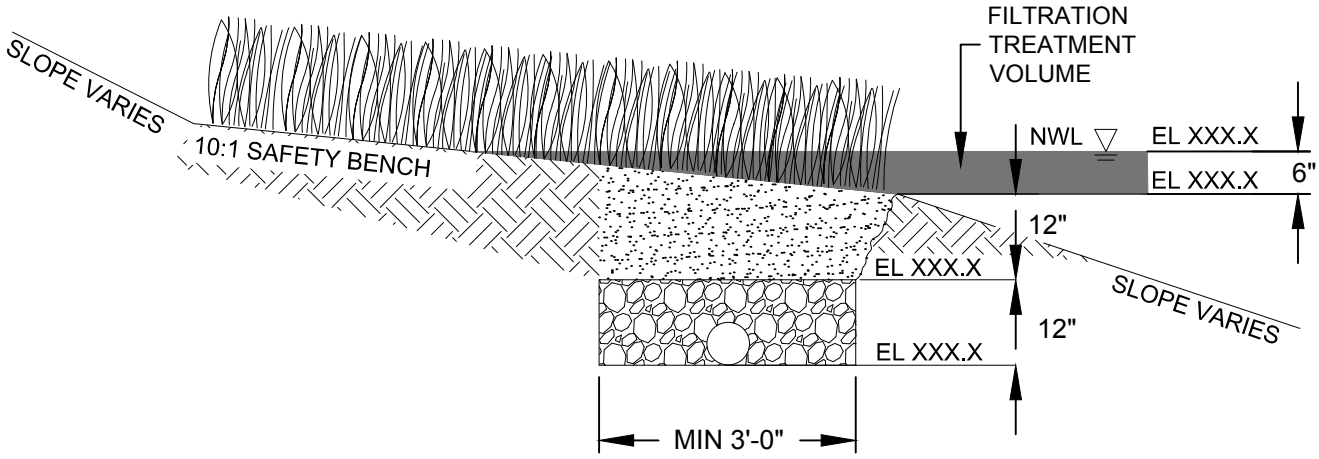

CALCULATIONS TO MEET RULES

VOLUME:

1. NO VOLUME REDUCTION IS GIVEN FOR BIORETENTION BENCH.

WATER QUALITY:

1. WATER QUALITY CREDIT FOR TP IS CALCULATED AS 60% OF NURP VOLUME AND 75% OF FILTRATION VOLUME; CREDIT FOR TSS IS CALCULATED AS 80% OF NURP VOLUME AND 90% OF FILTRATION VOLUME.

DRAWDOWN:

1. 48 HOUR DRAWDOWN OF BMPS IS REQUIRED. TO DETERMINE LENGTH OF TRENCH NEEDED, USE FILTRATION RATE OF 50 CF OF PONDED VOLUME WILL PASS THROUGH ONE LINEAR FOOT OF 3' WIDE TRENCH, OR 17 CF OF PONDED VOLUME PER SF OF SURFACE AREA. RETROFITS USE MINIMUM 150 SF.

CARVER COUNTY	WENCK ASSOCIATES Responsive partner. Exceptional outcomes.	BIORETENTION BENCH	DEC 2016 DETAIL 8

M:\1097\GENERAL DETAILS\December 2016 Details\8-BIORETENTION BENCH.dwg

PLAN VIEW

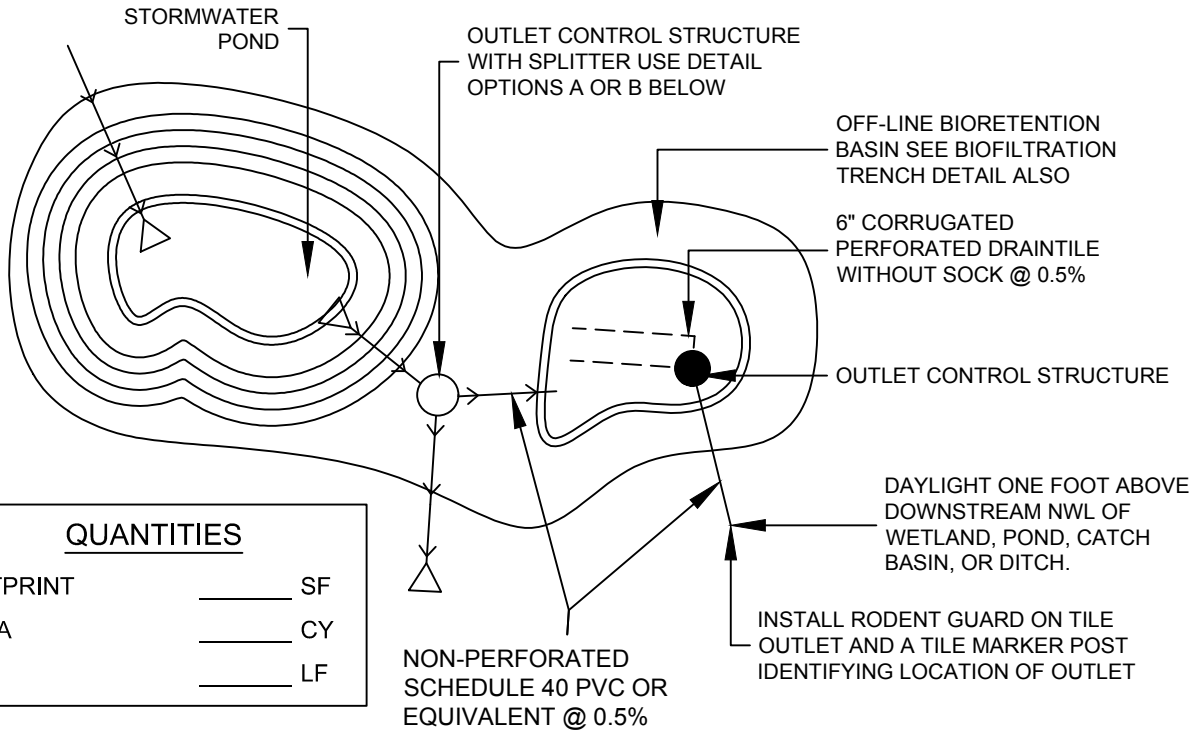

QUANTITIES

FOOTPRINT	_____	SF
MEDIA	_____	CY
TILE	_____	LF

SECTION VIEW OPTIONS

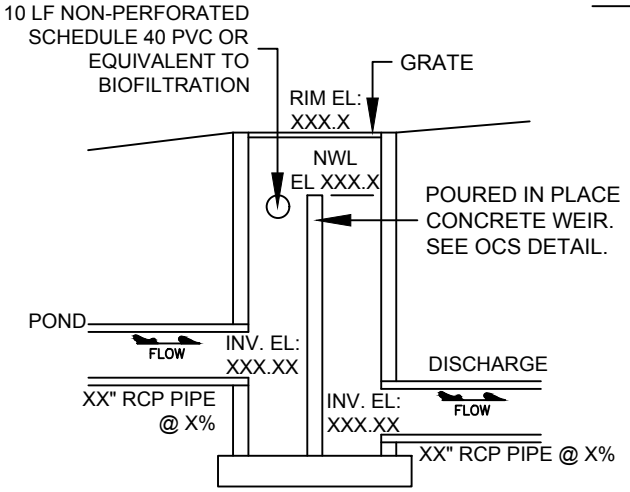

A OCS DETAIL – OPTION A

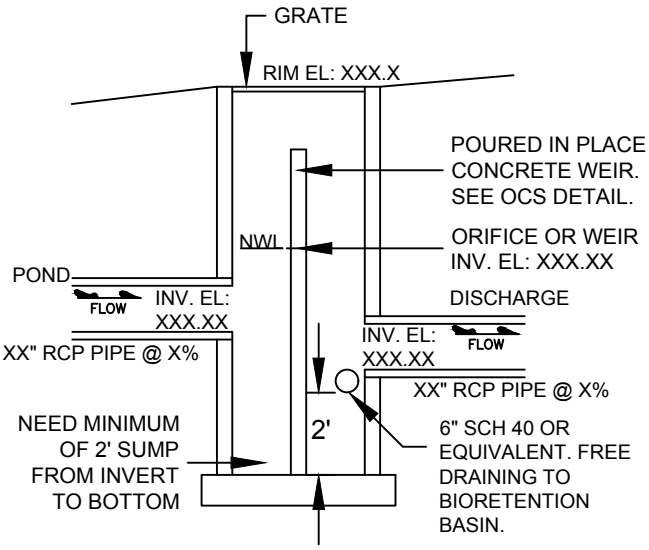

B OCS DETAIL – OPTION B

CARVER COUNTY	WENCK ASSOCIATES Responsive partner. Exceptional outcomes.	OFF-LINE FILTRATION BASIN	DEC 2016
			DETAIL 9

M:\1097\GENERAL DETAILS\December 2016 Details\9-OFF-LINE FILTRATION BASIN.dwg

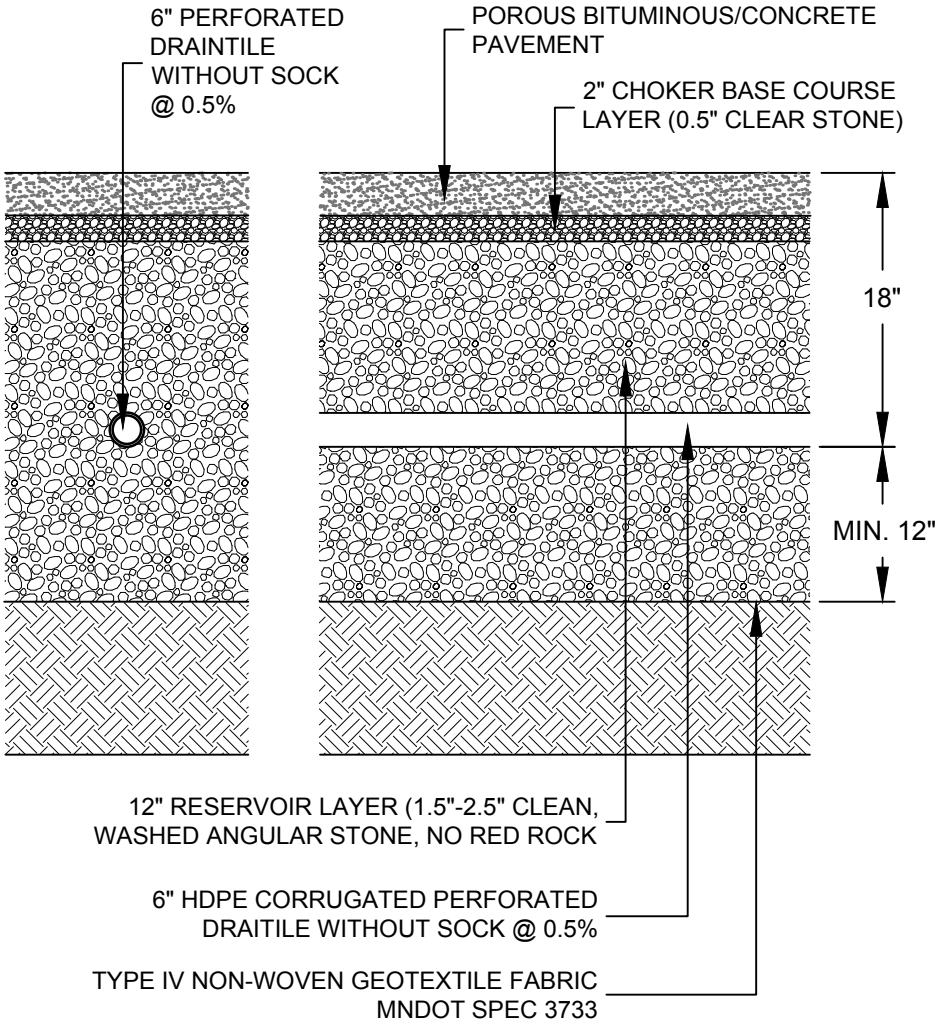

NOTES:

1. EDGE CONSTRAINT ON ALL BOUNDARIES, CONCRETE CURBING, OR STEEL EDGES ARE PREFERRED.

CALCULATIONS TO MEET RULES

VOLUME:

1. VOLUME REDUCTION IS CALCULATED AS 50% OF TOTAL ROCK VOLUME BELOW TILE INVERT.
2. NO WATER QUALITY CREDIT PROVIDED

CARVER COUNTY	WENCK ASSOCIATES Responsive partner. Exceptional outcomes.	POROUS PAVEMENT	DEC 2016
			DETAIL 10

M:\1097\GENERAL DETAILS\December 2016 Details\10-POROUS PAVEMENT.dwg

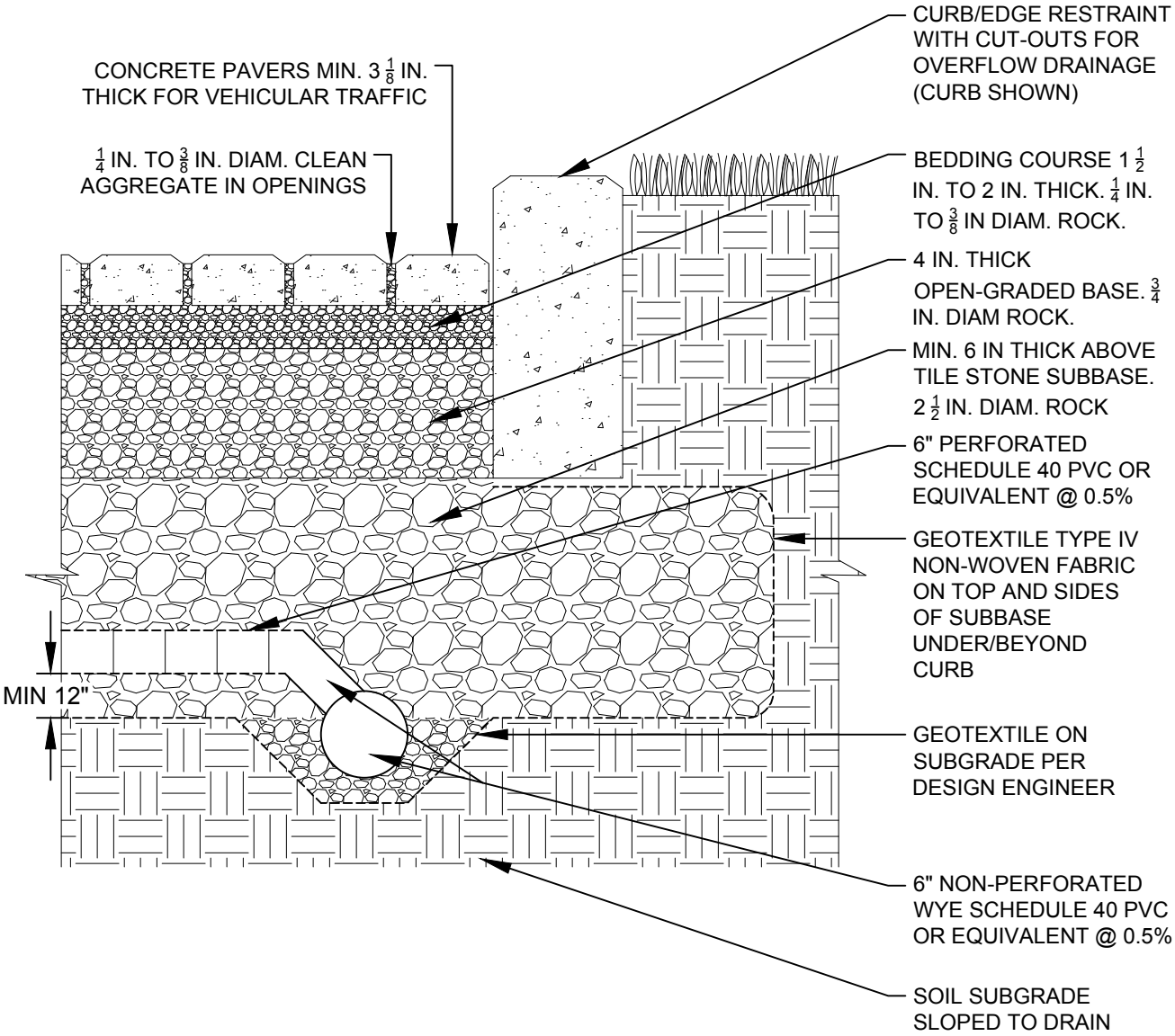

NOTES:

1. 2 3/8 IN. THICK PAVERS MAY BE USED IN PEDESTRIAN AND RESIDENTIAL APPLICATIONS.
2. VOLUME REDUCTION IS CALCULATED AS 50% OF TOTAL ROCK VOLUME BELOW TILE INVERT.
3. NO WATER QUALITY CREDIT PROVIDED.

CARVER COUNTY	WENCK ASSOCIATES Responsive partner. Exceptional outcomes.	PERMEABLE PAVEMENT EXAMPLE	DEC 2016 DETAIL 11

M:\1097\GENERAL DETAILS\December 2016 Details\11-PERMEABLE PAVEMENT WITH EXFILTRATION.dwg

Section 3. CCWMO Calculator Guidance

The CCWMO Calculators (http://www.co.carver.mn.us/home/showdocument?id=5871) were developed to help guide applicants through an easy spreadsheet to determine if proposed BMPs will meet the requirements of Carver County Water Management Organization for treating stormwater. Due to the different requirements for a linear project and a non-linear project, two distinct calculators have been created . These Calculators are also a useful tool in sizing BMPs and for comparing different options that can be used on site.

Each calculator has 11 distinct BMPs that can be chosen from the "Select BMP" dropdown lists. For each BMP, the BMP Details (total volume for the practice or the square footage) must be entered by the applicant. The associated volume reduction, TP treatment, and TSS treatment are calculated from these inputs. For stormwater reuse, BMP details are automatically entered.

BMPs Included in the Calculator

- **Amended Soils.** Amended soils are used as a volume treatment. The square footage of the area is to be entered in the 'BMP Details' cell. The volume credit is 0.5" over the area, or 4.17% of the square footage.

- **Bioretention <3' Separation.** In locations where a 3 foot separation from a limiting factor such as bedrock or perched ground water does not exist, the bioretention trench can be used for credits towards both TP and TSS requirements. Enter the storage volume of the bioretention basin in the 'BMP Details' cell. TP credit is 75% of the ponded volume and TSS credit is 90% of the ponded volume.

- **Bioretention >3' Separation.** For areas that do not have a limiting factor below the tile line, a 2 foot deep trench 3 feet wide can be constructed below the tile to receive a volume credit in addition to the water quality credits. Volume credit is calculated as 40% of the ponded volume. TP and TSS credits are the same as other Bioretention BMPs. As with the other bioretention BMPs, enter the total volume of the ponded water in the basin.

- **Bioretention Swale.** These BMPs are similar to Bioretention BMPs. Enter the ponded volume in the 'BMP Details' cell. Volume credit is 40% of the ponded volume, TP credit is 75% of the ponded volume and TSS credit is 90% of the ponded volume.

- **Disconnecting Impervious Surface**. Disconnecting impervious surfaces, or specifically routing stormwater to vegetation, allows for sheet flow to be treated by vegetation. 45% TP reduction and 75% TSS reduction with a maximum area equal to the area of impervious area discharging to the area. Discharge must be uniformed sheet flow with a max flow path of 100 feet.

- **Hydrodynamic Separator.** Hydrodynamic separators are used within the stormwater sewer system as an in-pipe BMP to remove solids from stormwater. Use of these structures result in a 50% reduction in TSS, no credit is giving to TP or volume.

- **Iron Enhanced Sand Filter with <3' Separation.** Similar to a bioretention basin, an iron-enhanced filtration basin will achieve a 90% reduction for TP. Construction is slightly different

than a Bioretention, with the increase of one more foot of sand/iron mix on top of the tile. For the 'BMP Details' cell enter the volume of the ponded water. There is no volume credit for this BMP and a 90% reduction credit for both TP and TSS.

- **Iron Enhanced Sand Filter with >3' Separation.** Addition of iron filings can be used to increase the TP credit from 75% to 90%, which is especially useful in site locations that are limited by available space for additional BMPs. Volume credit will be 40% of the ponded volume. TP and TSS credits are both 90% of the ponded volume. Enter the total volume of the ponded volume in the basin for the 'BMP Details' cell.

- **Pervious Pavement.** Parking spaces and low traffic areas are ideal placement for pervious pavement due to maintenance requirements. There are three main types of pervious pavement that can be used; porous concrete, permeable asphalt, and permeable pavers. The volume credit is calculated as 50% of the total rock volume below tile invert elevation. Enter the total rock volume in the "BMP Details" cell. There is no TP or TSS credit given for this type of BMP.

- **Pond (NURP).** Stormwater Ponds have been an integral part of treating stormwater since the early 1980's and are designed based upon NURP (Nationwide Urban Runoff Program) design criteria. This BMP does not receive any volume reduction credits. TP volume reduction is 60% and TSS reduction is 80% of the dead storage volume with the max being 60% and 80% of the required Water Quality reduction requirement. Enter in the dead storage volume into the "BMP Details" cell.

- **Pond (NURP) with Filtration.** A filtration shelf or filtration trench is added to a stormwater pond to increase the Water Quality reduction. TP reduction is increased to 90% and TSS reduction is increased to 90%. Enter the volume that will be filtered through the shelf or trench in the "BMP Details" cell.

- **Pond (MN Stormwater Manual).** The Minnesota Stormwater Manual offers design criteria that is different from the NURP Design Standards, which results in a dead pool storage thatis less than a NURP Pond. Due to this, TP and TSS treatment is reduced. TP volume reduction is 40% and TSS reduction is 65% of the dead storage volume with the max being 40% and 65% of the required Water Quality reduction requirement. Enter in the dead storage volume into the "BMP Details" cell.

- **Pond (MN Stormwater Manual) with Filtration.** A filtration shelf or filtration trench is added to a stormwater pond to increase the Water Quality reduction. TP reduction is increased to 75% and TSS reduction is increased to 80%. Enter the volume that will be filtered through the shelf or trench in the "BMP Details" cell.

- **Stormwater Reuse.** Stormwater can be used for irrigation from either a storm pond or underground storage tanks. This BMP cannot be used as the sole treatment option for a site due to the limited operational time span. Volume credit is based upon the three limiting factors and is calculated in the Stormwater Reuse Calculations tab. Currently there is no credit for TP and TSS requirements.

- **Upland Vegetation**. The purpose of preserving or restoring pervious upland areas (prairie, woodland, forest) is to decrease the volume and rate of runoff by preserving soil absorption and plant uptake. Conservation easements are recorded to ensure the permanent protection of these areas. The volume credit is 0.5 inches over the preserved or restored area, no TP or TSS credit is available for this BMP. Enter in the square feet of the upland vegetation in the "BMP Details" cell.

Non-Linear Calculator Sections

The non-linear calculator was developed for projects not involving roads, trails, or sidewalks. There are four distinct sections within this Calculator; stormwater reuse, overall volume reduction, subwatersheds, and a summary sheet. These sections are arranged as tabs located at the bottom of the excel spreadsheet.

Overall Volume Section

The first tab titled "Overall Volume Reduction" will be used determine if the BMPs used onsite will meet the volume reduction requirements of the CCWMO. The approved approach for determining volume reduction is to calculate what the total volume is for the entire site. This is different than looking at water quality, where each subwatershed has to have treatment before leaving the site. In addition to looking at the overall site, the calculator reviews if the site is constrained. To be considered constrained, which reduces the amount of required volume reduction from 1 inch to 0.5 inches, a site must have more than 50 percent of the total area with a site specific conditions that include: low infiltration rates, less than 3 feet to bedrock, or well head protection. If the site utilizes Stormwater Reuse, a separate tab must be filled out to accurately calculate the total volume reduction of the proposed project.

Inputs

- Site impervious acres.
- Total site area in acres
- Constrained area in acres
- Select appropriate BMPs.
- Identify each BMP with a whole integer between 1 and 25. Use these throughout all plans to properly identify.
- If 'Stormwater Reuse' is selected, fill out the 'Stormwater Reuse Calculations' tab.
    - All fields will be automatically updated in this section and in the Watershed Section from the 'Stormwater Reuse Calculations' tab.

Outputs

- Calculator will determine how much volume is being credited through BMPs.
- Summation shows total amount.
- Percentage is how much is provided versus 'Volume to be Retained'.
    - A 'Yes/No' box indicates if the proposed BMPs meet the CCWMO Standards for the project site.

Stormwater Reuse Section

This is the second tab titled "Stormwater Reuse Calculations" that will be used to determine the correct volume reduction credit for a project site. It takes into account the three main limiting factors of utilizing stormwater for reuse; 1) irrigation area, 2) impervious surface draining to the storage area, and 3) the size of the storage area. Results, which will auto-populate other tabs in the calculator, will be for total volume credit given and associated irrigation area. This calculator can

only design one reuse system for a site, if there is more than one system being used; please contact CCWMO Staff to review options on how to show total credit.

Inputs

- Impervious surfaces draining to the BMP in acres.
- Irrigation area that will be irrigated.
- Choose irrigation rate (inches/week). Current standards indicate between 1 to 2 inches/week.
- Enter storage volume.

Outputs

- Limiting Factor
  - Calculator will determine the limiting factor of the site which is either the Irrigation Area or the Impervious Surface Area.
    - If the irrigation area is too large, water supply from the impervious surface is the limiting factor.
    - If the impervious surface is too large, the irrigation area is the limiting factor.
- Volume Credit
  - Volume credit is based upon the limiting factor as defined above.
  - Max volume credit is based off of 0.5” off of impervious surfaces. If the site is unconstrained, this limit is raised to 1”
- Irrigation Area
  - Irrigation area is based upon the volume credit.
    - If impervious surface is the limiting factor, than the irrigation area will be smaller than the user defined area.
    - If irrigation area is the limiting factor, than the user defined irrigation area will be the same.
- Required Storage
  - Determines if there is adequate storage in either a pond or storage tank
  - Sizing requirements.
    - Storm Ponds: the volume between the Normal Water Level and 4 feet above pond bottom is equal to 4x the required weekly amount.
    - Storage Tanks: volume of the tank is equal to 1 week of the required weekly amount.
  - If the storage is undersized, the maximum volume credit and irrigation area as calculated in the section below will be used.

Subwatershed Section(s)

Tabs 3 through 12 are designated for individual subwatersheds within the project site and will be used to review the water quality requirements of the CCWMO. A subwatershed is defined as an area that has a discharge offsite. It is possible to have multiple subwatersheds within one project. This will ensure that all water leaving the site receives adequate water quality treatment before discharging off site. Multiple BMPs can be used in a treatment train to achieve the required water quality reduction. It is assumed that all volume reduction BMPs receive a 100% TP and 100% TSS reduction for the first 0.5” off of impervious surfaces being treated. Due to this, the required water quality treatment within the calculator is adjusted to 0.5”, instead of 1”.

Inputs

- Label the subwatershed based upon the naming convention used within the Stormwater Management Plan.
- Input new impervious area of the subwatershed in acres.
- Select BMPs from the provided list.
    - Inputs for the Stormwater Reuse are automatically updated.
    - All BMP credits are capped at the listed percent reduction for both TP and TSS.
- Number each BMP with a whole integer between 1 and 25 that matches what is on both plan set and Stormwater Modeling.
- Input the size of the BMP.

Outputs

- Summation of each BMP Water Quality Credit for both TP and TSS.
- The percentage of the BMPS versus the required amount.
- 'Yes/No' boxes indicating if the selection and sizing of BMPs will meet CCWMO Water Quality Requirements.

Summary Section

The 'Summary Sheet' compiles all inputs from the Subwatershed tabs based upon the BMP ID#. This is a useful sheet to review if the site has multiple subwatersheds and keeping track of all the BMPs that are proposed. There are no user inputs, all fields are auto-populated.

<u>Linear Calculator Sections</u>

The linear calculator was developed for projects involving roads, trails, or sidewalks. The linear calculator is very similar to the non-linear calculator except that it incorporates reconstructed area, possible reduction in impervious, and new impervious variables. The calculator has the same distinct sections as the non-linear which were outlined above.

Overall Volume Section

The first tab titled "Overall Volume Reduction" will be used determine if the BMPs used onsite will meet the volume reduction requirements of the CCWMO. Linear projects incorporate two new variables in addition to whether a site is constrained or not. As with non-linear projects, if the site is constrained, the volume is reduced from 1 inch treatment to 0.5 inch for all new impervious areas. In addition to the site constraint variable, linear projects that reconstruct a portion of the road will have to treat 10 percent of the volume generated from a 1 inch storm over the reconstructed area. It is assumed that all volume reduction BMPs receive a 100% TP and 100% TSS reduction for the first 0.5" off of new impervious surfaces being treated. Due to this, the required water quality treatment within the calculator is adjusted to 0.5", instead of 1". Finally, if the project results in a net reduction of 10 percent of impervious surface, then volume reduction requirement has been met.

Inputs

- Existing impervious acres.
- Proposed New Impervious Area in acres
- Proposed Reconstructed Impervious Area in acres
- Total site area in acres
- Constrained area in acres
- Select appropriate BMPs.

- Identify each BMP with a whole integer between 1 and 25. Use these throughout all plans to properly identify.
- If 'Stormwater Reuse' is selected, fill out the 'Stormwater Reuse Calculations' tab.
    - All fields will be automatically updated in this section and in the Watershed Section from the 'Stormwater Reuse Calculations' tab.

Outputs

- Calculator will determine how much volume reduction is required
- Calculator will determine how much volume is being credited through BMPs.
- Summation shows total amount.
- Percentage is how much is provided versus 'Volume to be Retained'.
    - A 'Yes/No' box indicates if the proposed BMPs meet the CCWMO Standards for the project site.

Stormwater Reuse Section

This is the second tab titled "Stormwater Reuse Calculations" that will be used to determine the correct volume reduction credit for a project site. It takes into account the three main limiting factors of utilizing stormwater for reuse; 1) irrigation area, 2) impervious surface draining to the storage area, and 3) the size of the storage area. Results, which will auto-populate other tabs in the calculator, will be for total volume credit given and associated irrigation area. This calculator can only design one reuse system for a site, if there is more than one system being used; please contact CCWMO Staff to review options on how to show total credit. There are no major differences between the non-linear and linear calculators for stormwater reuse.

Inputs

- Impervious surfaces draining to the BMP in acres.
- Irrigation area that will be irrigated.
- Choose irrigation rate (inches/week). Current standards indicate between 1 to 2 inches/week.
- Enter storage volume.

Outputs

- Limiting Factor
    - Calculator will determine the limiting factor of the site which is either the Irrigation Area or the Impervious Surface Area.
        - If the irrigation area is too large, water supply from the impervious surface is the limiting factor.
        - If the impervious surface is too large, the irrigation area is the limiting factor.
- Volume Credit
    - Volume credit is based upon the limiting factor as defined above.
    - Max volume credit is based off of 0.5" off of impervious surfaces. If the site is unconstrained, this limit is raised to 1"
- Irrigation Area
    - Irrigation area is based upon the volume credit.
        - If impervious surface is the limiting factor, than the irrigation area will be smaller than the user defined area.
        - If irrigation area is the limiting factor, than the user defined irrigation area will be the same.

- Required Storage
  - Determines if there is adequate storage in either a pond or storage tank
  - Sizing requirements.
    - Storm Ponds: the volume between the Normal Water Level and 4 feet above pond bottom is equal to 4x the required weekly amount.
    - Storage Tanks: volume of the tank is equal to 1 week of the required weekly amount.
  - If the storage is undersized, the maximum volume credit and irrigation area as calculated in the section below will be used.

Subwatershed Section(s)

Tabs 3 through 12 are designated for individual subwatersheds within the project site and will be used to review the water quality requirements of the CCWMO. A subwatershed is defined as an area that has a discharge offsite. It is possible to have multiple subwatersheds within one project. This will ensure that all water leaving the site receives adequate water quality treatment before discharging off site. Multiple BMPs can be used in a treatment train to achieve the required water quality reduction. Linear projects have another requirement for reconstructed impervious areas of treating 10 percent of the 1 inch storm over this area which is included in the formula equating the total water quality treatment volume. As with the volume reduction requirement, if the total impervious area has a net reduction of 10 percent, then the treatment requirement for water quality has been met. It is assumed that all volume reduction BMPs receive a 100% TP and 100% TSS reduction for the first 0.5" off of new impervious surfaces being treated. Due to this, the required water quality treatment within the calculator is adjusted to 0.5", instead of 1".

Inputs

- Label the subwatershed based upon the naming convention used within the Stormwater Management Plan.
- Input existing impervious area of the subwatershed in acres.
- Input proposed new impervious area in acres
- Input proposed reconstructed impervious area in acres
- Select BMPs from the provided list.
  - Inputs for the Stormwater Reuse are automatically updated.
  - All BMP credits are capped at the listed percent reduction for both TP and TSS.
- Number each BMP with a whole integer between 1 and 25 that matches what is on both plan set and Stormwater Modeling.
- Input the size of the BMP.

Outputs

- Summation of each BMP Water Quality Credit for both TP and TSS.
- The percentage of the BMPS versus the required amount.
- 'Yes/No' boxes indicating if the selection and sizing of BMPs will meet CCWMO Water Quality Requirements.

Summary Section

The 'Summary Sheet' compiles all inputs from the Subwatershed tabs based upon the BMP ID#. This is a useful sheet to review if the site has multiple subwatersheds and keeping track of all the BMPs that are proposed. There are no user inputs, all fields are auto-populated.

Section 4. Example Maintenance Plan and Declaration

Sample: Maintenance Declaration, Operations & Maintenance Plan, and Inspection Checklists

Prepared by:

Carver County Water Management Organization
in cooperation with Carver Soil and Water Conservation district

Draft

CONTENTS

Maintenance Declaration……..3

Operations & Maintenance Plan……..6

Site Location Map + Aerial……7

Porous Paving – Drainage Area, Utility Plan, Details……..8

Infiltration Basin – Planting Plan, Cross section……9

Plant Identification guide……10

Biofiltration Inspection Checklist……..11

Porous Paving – Inspection Checklist……13

Draft

Declaration for Maintenance of Stormwater Facilities: Porous Paving + Biofiltration

Draft

DECLARATION FOR MAINTENANCE
of
STORMWATER FACILITIES

THIS DECLARATION is made this 31st day of March, 2014, by Carver County Facilities Department at 600 E 4th St, Chaska MN 55318 ("Declarant"), in favor of the Carver County Watershed Management Organization, a body with powers pursuant to Minnesota Chapters 103B and 103D ("CCWMO").

WHEREAS, Declarant(s) hold(s) fee interest in real property within the City of Chaska, Carver County, Minnesota, platted and legally described as:

Lot 1, Block 1, and Outlot A. COURTHOUSE CAMPUS TWO. PID# 301490010

WHEREAS, no one other than Declarant(s) possess(es) any right, title or interest in the Property;

WHEREAS, the facilities on or to be located on the Property to which the maintenance requirements in the Declaration apply as labeled on the scaled site plan located in the Operations and Maintenance Plan are as follows (the Facilities):

Porous Paving w/ underdrain

Planted Biofiltration w/ underdrain

WHEREAS, Declarant desires to subject the Property to certain conditions and restrictions imposed by the CCWMO as a condition to issuance of CCWMO Permit # WP20080039 for the mutual benefit of the CCWMO and Declarant.

NOW THEREFORE Declarant makes this declaration and hereby declares that this declaration shall constitute covenants to run with the Property, and further declares that the Property shall be owned, used, occupied, and conveyed subject to the covenants and restrictions set forth in this declaration, all of which shall be binding in perpetuity on all persons owning or acquiring any right, title or interest in the Property, and their heirs, successors, personal representatives and assigns, but only during the period of ownership of that right, title or interest.

1. Declarant will inspect the Facilities at least annually.

2. Declarant will maintain and repair all facilities, as necessary to preserve the integrity and intended function of the facility:

   a) In the case of basins and other facilities where sediment collects, to preserve storage or capacity at or above the design volume or, where no design storage volume or capacity is incorporated into the permit, the volume or capacity recommended by the manufacturer, including regular cleaning of pretreatment devices.

   b) In the case of conveyances and other structures, to preserve design hydraulic capacity.

   c) In the case of facilities relying on soils and vegetation for stormwater management or treatment, to preserve healthy vegetation and design soil permeability.

   d) In the case of facilities where stormwater is to be reused for irrigation purposes, as necessary to preserve the capacity of the system to distribute the design volume.

   e) In the case of filtration systems including porous pavement, to preserve the permeability or capacity at or above the designed infiltration rate.

3. Declarant will submit annually, a report to include inspection dates, facility conditions, and corrective actions taken.

4. If Declarant fails to perform required maintenance to stormwater facilities resulting in deviation from the designed treatment performance or efficiency, the CCWMO may notify Declarant of this deficiency. If Declarant has not completed or scheduled corrective action within 60 days of receipt of notification, the CCWMO may perform any action deemed necessary to return full design function and treatment performance to the stormwater treatment facility. The Declarant shall be responsible for reimbursement of all costs incurred from such activity including but not limited to administrative overhead and attorney's fees.

5. Any notice under this declaration shall be sent by certified mail, return receipt requested, or delivered to the following address:

Draft

Facilities Services Department
c/o Kevin Maas
600 E 4th St
Chaska MN 55318

Declarant may change this address by a certified letter to the CCWMO referencing the permit number.

6. If Declarant, its successors or assigns, materially changes use of the Property so that the Facilities which are the subject of this Declaration are rendered unnecessary, or are replaced by other Facilities approved by the CCWMO, its successors or assigns, this Declaration shall become void and of no further force or effect.

7. An executed copy of this declaration shall be filed with Carver County Registrar or Carver County Recorder, filing cost to be borne by the Declarant. This declaration will be unlimited in duration without being re-recorded.

Kevin Maas
DECLARANT

_____

The foregoing instrument was acknowledged before me this 31st day of March, 2014 by

John Doe.

John Doe

_____

Notary

This instrument was drafted by:

Carver County Watershed Management Organization
400 East 4th Street
Chaska, MN 55318
1/21/2014

Draft

Operations and Maintenance Plan Carver county Courthouse Porous Paving + Biofiltration

Legal Description: Lot 1, Block 1, and Outlot A. COURTHOUSE CAMPUS TWO. PID# 301490010

Contact: Kevin Maas (952) - 361-1557
600 E 4th St
Chaska, MN 55318

Project Description/ Purpose: This project was installed during the fall of 2008 as a demonstration site for the use of porous paving and planted filtration trench within Carver County. The project serves to treat the stormwater prior to entering into the adjacent East Chaska Creek. The approximate drainage area is ~ 37,000 sq ft. Maintenance is necessary to the functionality and long-term success of the project. Features include:

- Porous bituminous pavement w/ underdrain
- Planted Biofiltration w/ underdrain

All underdrains are connected to adjacent catch basin w/ manhole. Inspections of the connection into the catch basin will indicate that the underdrain is functioning.

Maintenance Tasks – Courthouse Porous Paving + Biofiltration

Timeline	Task	Personnel
February	➢ Schedule porous pavement sweeper for April, July and October	➢ Facilities Dept. Manager
April	➢ Remove dead plant material (if not completed in the fall) ➢ Sweep porous pavement with a regenerative air vacuum sweeper ➢ Replace and dead plants w/ new plugs or transplants	➢ Facilities Dept. Staff ➢ Contracted Services & Facilities Dept. Manager
May	➢ Add mulch swale as needed ➢ Mow grass buffer around swale	➢ Facilities Dept. Staff ➢ Contracted Services & Facilities Dept. Manager
June	➢ Mow grass buffer around swale ➢ Weed swale	➢ Contracted Services & Facilities Dept. Manager ➢ Facilities Dept. Staff (Planning & Water Mngt staff are available to assist with plant identification)
July	➢ Weed swale ➢ Mow grass buffer around swale ➢ Sweep porous pavement with a regenerative air vacuum sweeper	➢ Facilities Dept. Staff (PWM staff available to assist) ➢ Contracted Services & Facilities Dept. Manager ➢ Contracted Services & Facilities Dept. Manager
August	➢ Mow grass buffer around swale ➢ Weed swale	➢ Contracted Services & Facilities Dept. Manager ➢ Facilities Dept. Staff (PWM staff are available to assist with plant identification)
September	➢ Mow grass buffer around swale	➢ Contracted Services & Facilities Dept. Manager
October	➢ Mowing & fixing any erosion/gullying formed during season	➢ Facilities Dept. Staff
Early November	➢ Remove dead plant material (could also wait until spring) ➢ Sweep porous pavement with a regenerative air vacuum sweeper	➢ Facilities Dept. Staff ➢ Contracted Services & Facilities Dept. Manager
Additional	No sand (de-icing) is to be used at any time on or around the porous pavement. Salt use for de-icing should follow the guidelines laid out by the Minnesota Pollution Control Agency.	

Draft

Location Map

Site aerial

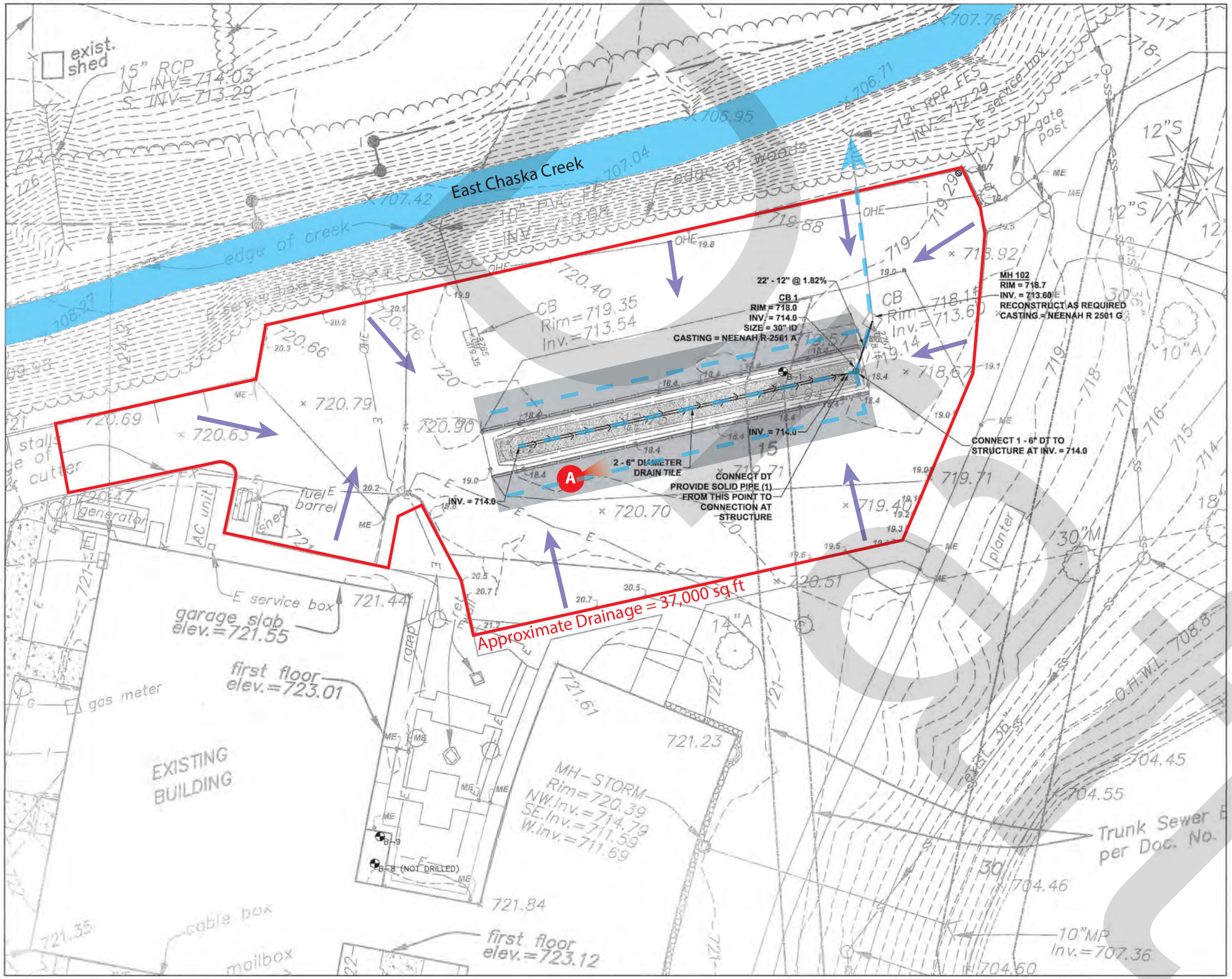

1
C4.1

UTILITY PLAN - BASE BID

Looking East-Northeast from point A

Porous Bituminous

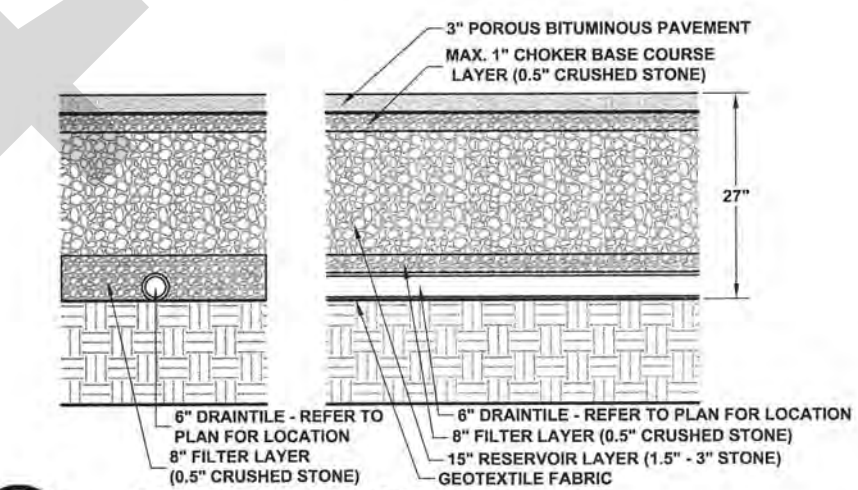

15
C5.1

POROUS PAVEMENT (ALTERNATE NO. 4)

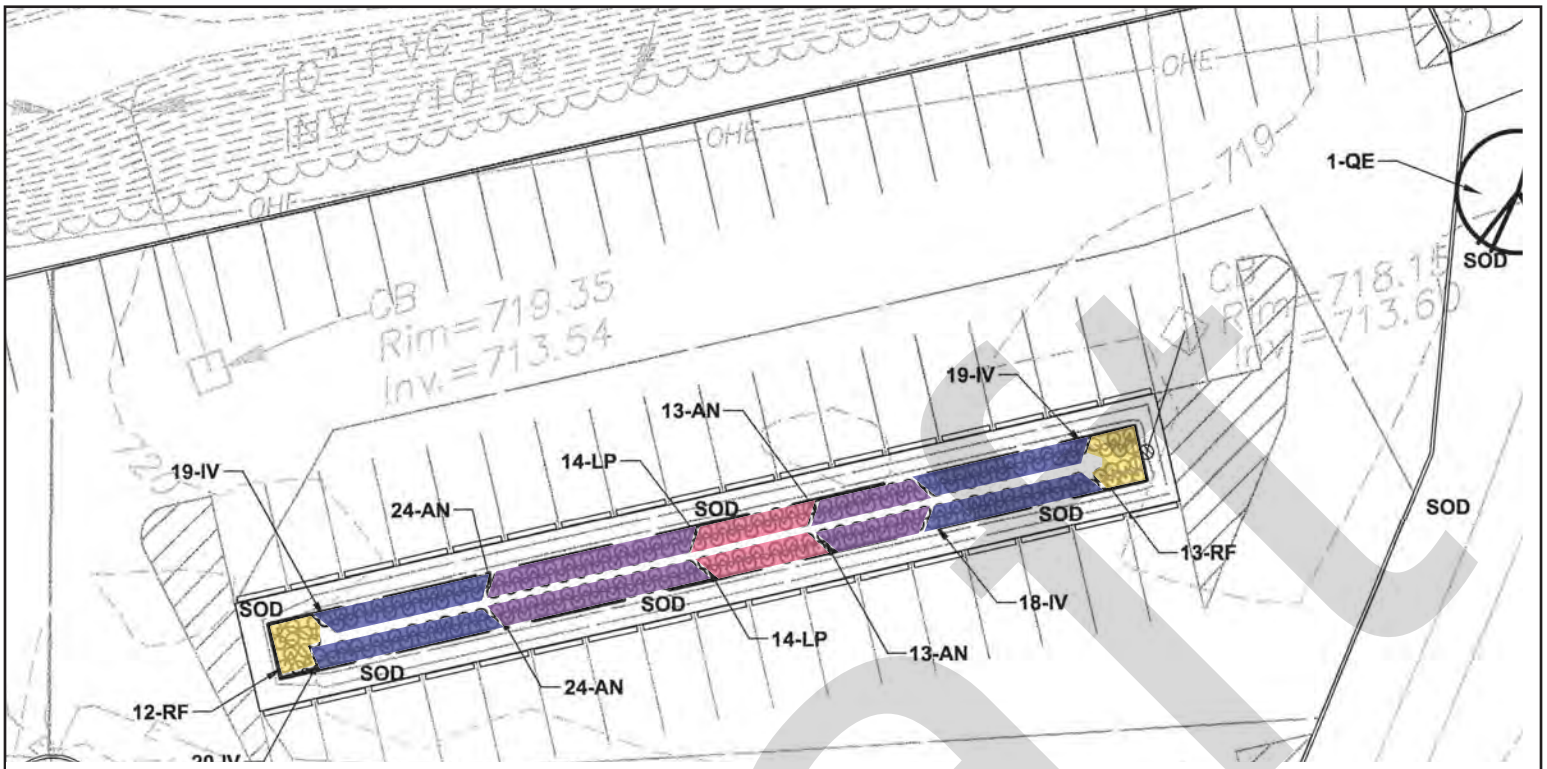

INFILTRATION BASIN PLANTINGS

	Common Name	Scientific Name	QTY.
AN	New England Aster	Aster novae-angliae	74
IV	Blue Flag Iris	Iris versicolor	76
LP	Prairie Blazingstar	Liatris pychnostachya	28
RF	Black Eyed Susan	Rudbeckia hirta	25

1 / L1.1 **LANDSCAPE PLAN**

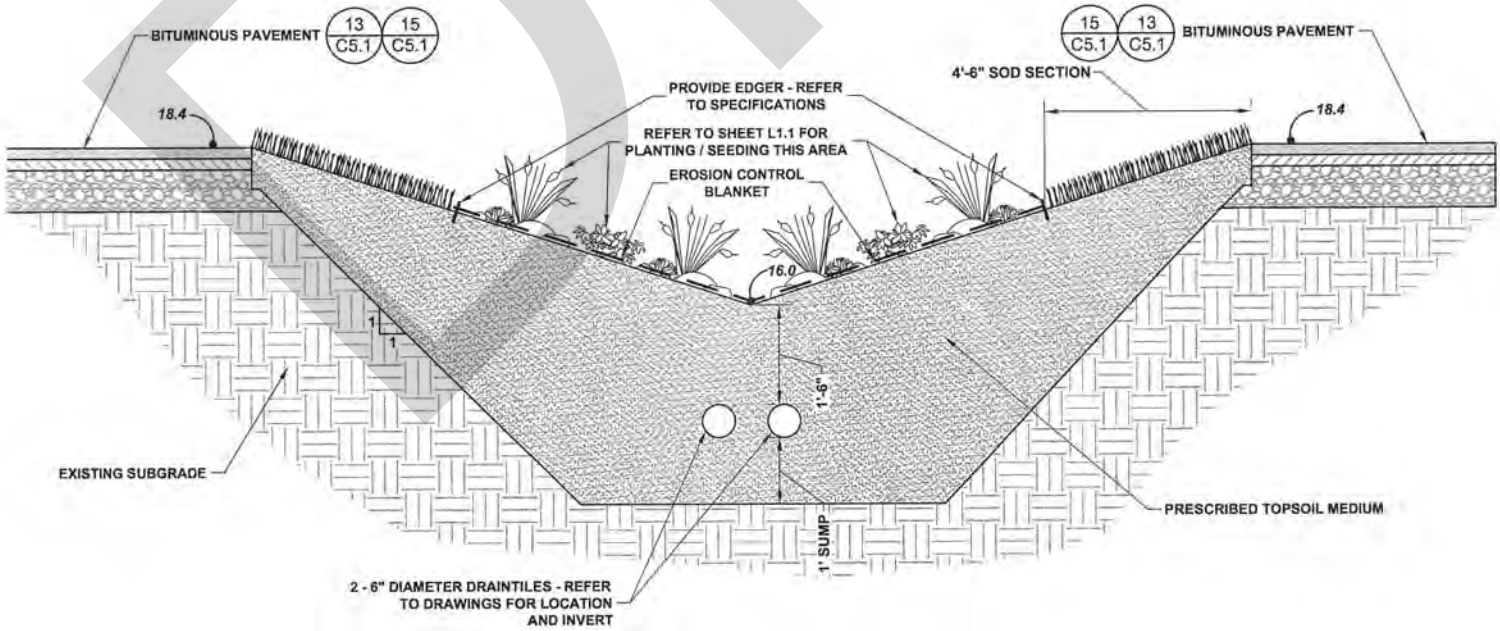

20 / C5.1 **SECTION THRU INFILTRATION BASIN**

Draft

	Flower	Leaf	Juvenile
AN New England Aster			
IV Blue Flag Iris			
LP Prairie Blazingstar			
RF Black Eyed Susan			

Biofiltration (Rain Garden) Maintenance Inspection Checklist

Inspector:
Date:
Time:
Weather: Rainfall over previous 2-3 days? Reading from closest NOAA reporting station:_____”
Rain Garden Location:

Mark items in the table below using the following key:

- **X** Needs immediate attention
- **–** Not Applicable
- ✓ Okay
- **?** Clarification Required.

Rain Garden Components:

Items Inspected	Checked		Maintenance Needed		Inspection Frequency
DEBRIS CLEANOUT	Y	N	Y	N	**M**
1. Rain gardens and contributing areas clean of debris					
2. No dumping of yard wastes into rain garden					
3. Litter (trash, debris, etc.) have been removed					
VEGETATION					**M**
4. No evidence of erosion					
5. Is plant composition still according to approved plans					
6. No placement of inappropriate plants					
DEWATERING AND SEDIMENTATION					**A,AMS**
7. Rain garden dewaters between storms					
8. No evidence of standing water					
9. No evidence of surface clogging					
10. Sediments should not be greater than 20% of swale design depth					
OUTLETS/OVERFLOW SPILLWAY					**A, AMS**
11. Good condition, no need for repair					
12. No evidence of erosion					
13. No evidence of any blockages					
INTEGRITY OF BIOFILTER					**M**
14. Raingarden has not been blocked or filled inappropriately					
15. Mulch layer is still in place (depth of at least 3”)					
16. Noxious plants or weeds removed					

Inspection Frequency Key **A= Annual, M= Monthly, AMS= After Major Storm**

Draft

Comments:

OVERALL CONDITION OF FACILITY:

In accordance with approved design plans? Y / N In accordance with As Built plans? Y / N

Dimension on as built:

Field Verified Dimension:

Maintenance required as detailed above? Y / N Compliance with other consent conditions? Y / N

Comments:_____

_____

Dates by which maintenance must be completed: _____/___/_____

Dates by which outstanding information as per consent conditions is required by: :_____/___ /_____

Inspector's signature:_____

Consent Holder/Engineer/Agent's signature:_____

Consent Holder/Engineer/Agent's name printed:_____

Draft

Porous Paving Maintenance Inspection Checklist

Inspector:
Date:
Time:
Weather: Rainfall over previous 2-3 days? Site Conditions:

Mark items in the table below using the following key:

- **X** Needs immediate attention
- – Not Applicable
- ✓ Okay
- **?** Clarification Required.

Porous Paving Components:

Items Inspected	Checked		Maintenance Needed		Inspection Frequency
PAVEMENT SURFACE	Y	N	Y	N	M
1. Signs of clogging (e.g. standing water)?					
2. Debris accumulation (mulch, sticks, trash)?					
3. Sediment accumulation?					
4. Standing water present?					
ADJACENT AREAS					A, AMS
5. Erosion from underdrain outlet?					
6. Exposed soil in areas discharging to porous paving?					
7. Is porous pavement adversely affected by any adjacent site feature?					
DEWATERING					A, AMS
8. Does runoff discharge from pavement area within 48hrs?					
OUTLETS/OVERFLOW					A, AMS
9. Is outlet for storm sewer system free from debris and in good working order?					
OTHER					
10. Have there been complaints?					A
11. Public Hazard noted?					
12. Other:					

Inspection Frequency Key **A= Annual, M= Monthly, AMS= After Major Storm**

Draft

Comments:

OVERALL CONDITION OF FACILITY:

In accordance with approved design plans? Y / N

In accordance with As-Built plans? Y / N

Dimension on as built: Y / N

Field Verified Dimension: Y / N

Maintenance required as detailed above? Y / N

Compliance with other consent conditions? Y / N

Comments:_____

_____

Dates by which maintenance must be completed: _____/___/_____

Dates by which outstanding information as per consent conditions is required by: :_____/___ /_____

Inspector's signature:_____

Consent Holder/Engineer/Agent's signature:_____

Consent Holder/Engineer/Agent's name printed:_____

Draft

Section 5. Upland Preservation Easement Template

OPEN SPACE CONSERVATION EASEMENT AGREEMENT

This **OPEN SPACE CONSERVATION EASEMENT AGREEMENT** is entered into by and between _____, a Limited Liability Company under the laws of the State of Minnesota (the "**Grantor**"), and Carver County, Minnesota, a political subdivision of the State of Minnesota (the "**Grantee**"); the terms of this Conservation Easement Agreement may also be enforced by _____, as the agent for Grantee, as authorized by Grantee from time to time.

RECITALS

A. Grantor is the current owner of real property in Carver County, Minnesota legally described on **Exhibit A** attached hereto (the "**Protected Property**").

B. The Protected Property has open space values of significant importance, hereafter referred to as "**Conservation Values**." [MORE SPECIFICS IF POSSIBLE RE: THIS] Preservation of the Protected Property will further policies established by the Carver County Comprehensive Land Use Plan, Carver County Planning & Water Management Plan, Minnesota Statutes Chapter 84C, and Minnesota Statutes Chapter 103A.

C. The Grantor and Grantee intend to create a conservation easement that is binding upon the Grantor and all future owners of the Protected Property, conveying to Grantee the right to protect and preserve the Conservation Values of the Protected Property for the benefit of current and future generations.

D. The Grantor and Grantee intend this Easement Agreement to meet the volume requirements of appendix A of the Carver County Water Resource Management Ordinance, Chapter No. 153.

EXAMPLE

CONVEYANCE OF CONSERVATION EASEMENT:

Pursuant to the laws of the State of Minnesota including Minnesota Statutes Chapter 84C, and in consideration of the facts recited above and the mutual covenants contained herein, Grantor, for themselves and for their successors and assigns, hereby conveys and warrants to Grantee, and their successors and assigns, a perpetual conservation open space easement over the Protected Property, consisting of the following rights, terms, and restrictions (the "Easement"):

1. CONSERVATION PURPOSE.
The purpose of this Easement is to preserve and protect in perpetuity the Conservation Values of the Protected Property, by restricting the future development, management and use of the Protected Property, and by providing remedies for any breach or violation of this Agreement or the Easement.

2. LAND USE RESTRICTIONS.
Except as specifically permitted in paragraph 3 below, restrictions imposed upon the Protected Property include the following:

2.1. Industrial and Commercial Activity. No industrial or commercial activities may be conducted upon the Protected Property.

2.2. Agricultural Use. No agricultural activities may be conducted upon the Protected Property. Prohibited agricultural activities include, without limitation, tilling, plowing, haying, planting and harvesting of row crops, or the keeping, breeding, feeding or grazing of poultry, swine, cows or any other livestock.

2.3. Residential Development. No residential use or development of the Protected Property is allowed.

2.4. Right of Way. No right of way shall be granted across the Protected Property, in conjunction with any industrial, commercial, or residential use or development of other adjacent land not protected by this Easement; provided, that nothing in this paragraph shall impose any duty on the part of the Grantor to contest any eminent domain or other similar proceeding, or other taking by any federal, state or local government entity or agency.

2.5. Subdivision. The Protected Property may not be subdivided or partitioned, and may hereafter be conveyed only in its entirety as a single parcel, except as otherwise agreed by Grantee in each instance.

2.6. Density. No portion of the Protected Property may be used to satisfy land area requirements for other property not subject to this Easement, for purposes of calculating building density, lot coverage, or open space under otherwise applicable laws, regulations, or ordinances controlling land use.

2.7. Structures and Improvements. No temporary or permanent buildings, structures, utilities, roads or other improvements of any kind may be placed or constructed on the Protected Property.

EXAMPLE

a. Utilities. Electrical lines may be maintained, repaired and replaced only to serve uses and activities already occurring, or as otherwise hereafter approved by Grantee. Communications towers, electrical transmission towers and lines, wind turbines, and other similar structures will not be permitted, without prior written approval of Grantee in each instance.

b. Signs. No billboards or other signs may be placed or maintained on the Protected Property, other than small, unlighted signs for notice purposes, such as "no trespassing" or "private property" signs.

c. Roads and Trails. No roads or trails may be constructed or used on the Protected Property.

2.8. Dumping. No trash, non-compostable waste, hazardous or toxic substances, junk, or other unsightly material or debris may be dumped or accumulated on the Protected Property.

2.9. Topography And Surface Alteration. No alteration or change in the topography of the surface of the Protected Property is allowed. Ditching, draining, filling, grading and excavation or removal of soil, sand, gravel, rock or other materials, are not permitted, except where incidental to activities or uses specifically permitted by this Easement.

2.10. Water. No alteration or manipulation of natural watercourses, ponds, lakes, wetlands or other surface or subsurface bodies of water is allowed, except to restore or enhance wildlife habitat or native biological communities, or to improve or enhance the function and quality of existing wetlands, in accordance with a habitat management plan approved by the Grantee under paragraph 3 below.

2.11. Storage. The Protected Property may not be used for any kind of storage, whether above or below ground, specifically including boats, vehicles, equipment, etc.

2.12. Vegetation Management. No removal, cutting, pruning, trimming or mowing of any trees or other vegetation, and no introduction of non-native species, is allowed, except as follows:

a. In conjunction with forest or habitat protection and management, or as otherwise specifically permitted in paragraph 3 below.

b. As reasonably required to prevent or control insects, noxious weeds, invasive vegetation, disease, fire, personal injury, or property damage.

c. To remove fallen or dead trees, and to gather firewood for personal use, or as otherwise provided in Subparagraph 3.2 below.

3. RESERVED RIGHTS.

Grantor retains all rights associated with ownership and use of the Protected Property that are not expressly restricted or prohibited by this Agreement and the Easement. The Grantor may not, however, exercise such rights in a manner that would have a material, adverse impact on the open space Conservation Values of the Protected Property. Additionally, the Grantor must give notice to the Grantee before exercising any reserved right that might have a material, adverse impact on the Conservation

EXAMPLE

Values associated with the Protected Property. Without limiting the generality of the above, the following rights are expressly reserved and the Grantor may use and allow others to use the Protected Property as follows:

3.1. Right to Convey. The Grantor may sell, give, lease, bequeath, devise, mortgage or otherwise encumber or convey the Protected Property; provided, that any conveyance or encumbrance of the Protected Property is subject to the Easement and the terms of this Agreement.

3.2. Habitat and Forest Management. The Protected Property may be used to maintain, restore and enhance habitat for native wildlife, native plant life, and native biological communities. Any removal of timber shall be limited to fallen or dead trees, and firewood for personal use, unless in accordance with a woodland management plan approved by Grantee.

4. GRANTEE'S RIGHTS AND REMEDIES.

In order to accomplish the purposes of this Easement, the Grantee has the following rights and remedies:

4.1. Right to Enter. The Grantee or its agent has the right to enter the Protected Property at reasonable times and in a reasonable manner for the following purposes:

a. To inspect the Protected Property and to monitor compliance with the terms of this Easement.
b. To obtain evidence for use in seeking judicial or other enforcement of this Easement.
c. To survey or otherwise mark the boundaries of all or part of the Protected Property, if necessary to determine whether there has been or may be a violation of this Easement.
d. To otherwise exercise its rights under this Easement.

4.2. Right of Enforcement. The Grantee has the right to prevent or remedy violations of this Easement through appropriate judicial action brought against the Grantor or other responsible party, in any court of competent jurisdiction.

a. Notice. Grantee may not initiate judicial action until Grantor is given written notice of the violation, or threatened violation, of this Agreement and the terms of the Easement, and a reasonable opportunity to correct the violation, unless immediate judicial action is necessary to prevent or mitigate significant damage to the Protected Property and good faith efforts to notify Grantor are unsuccessful.
b. Remedies. Remedies available to the Grantee in enforcing the terms of the Easement and this Agreement include the right to request temporary or permanent injunctive relief for any such violation or threatened violation, to require restoration of the Protected Property to its condition at the time of this conveyance or as otherwise necessitated by such violation, to seek

EXAMPLE

specific performance or declaratory relief, and to recover damages resulting from such violation. The foregoing remedies are cumulative and are available without requiring the Grantee to prove actual damage to the Conservation Values.

c. Costs. Any costs incurred by Carver County in enforcing the terms of this Agreement against Grantor, including court costs and attorney's fees, and any cost of restoration necessitated by Grantor's violation of the terms of this Grant shall be borne by Grantor.

d. Discretionary Enforcement. Enforcement of the terms of the Easement and this Agreement is solely at the discretion of Grantee, and Grantee does not waive or forfeit the right to take any action necessary to assure compliance with the terms of the Easement and this Agreement by any delay or prior failure of Grantee in discovering a violation or initiating enforcement proceedings.

e. Acts Beyond Grantor's Control. Grantee may not bring any action against Grantor for any change to the Protected Property resulting from causes beyond Grantor's control, such as changes caused by fire, flood, storm, natural deterioration or the unauthorized acts of persons other than the Grantor or the Grantor's agents, employees or contractors, or, changes resulting from reasonable actions taken in good faith to attempt to prevent or mitigate damage resulting from such causes.

5. NO PUBLIC ACCESS.

Nothing whatsoever in this Easement shall be construed as giving the general public a right to enter upon or otherwise use the Protected Property, or to otherwise claim any rights whatsoever with respect to the Protected Property.

6. GENERAL PROVISIONS.

6.1. Assignment. This Agreement and the Easement may only be assigned or transferred by Grantee to another political subdivision of the State of Minnesota. Any such future holder of the Easement shall have the rights of Grantee pursuant to the terms of the Easement and this Agreement. Grantee will notify Grantor of any assignment within fifteen (15) days thereof, and will provide the Grantor with the name and address of the new holder.

6.2. Amendment. This Agreement and the Easement may not be modified, amended or extinguished without the express written agreement of Grantee in each instance. If the Easement is extinguished or terminated in whole or in part, Grantee shall not be entitled to any portion of any proceeds received from a sale, exchange or involuntary conversion.

6.3. Indemnification. Grantor, its successor and assigns, shall hold harmless, indemnify and defend Grantee and its employees, agents and contractors, and their successors and assigns (collectively "Indemnified Parties") from and against all liabilities, penalties, costs, losses, damages, expenses, causes of action,

EXAMPLE

claims, demands or judgments, including without limitation, reasonable attorneys' fees arising from or in any way connected with: (1) the result of a violation or alleged violation of any State or Federal environmental statue or regulation including the storage or disposal of hazardous or toxic chemicals or materials; (2) injury to or the death of any person, or physical damage to any property, resulting from any act, omission, condition or other matter related to or incurring on or about the premises, regardless of costs, unless due solely to the gross negligence of any of the Indemnified Parties; and (3) existence and administration of this easement.

6.4. Binding Effect. The Easement and this Agreement shall run with and burden the Protected Property in perpetuity. The terms of this Easement are binding and enforceable against Grantor, all successors in title to the Protected Property, and all other parties entitled to possess or use the Protected Property. This Easement creates a property right immediately vested in the Grantee and its successors and assigns that cannot be terminated or extinguished except as set out herein.

6.5 Enforceability. If any provisions of this easement, or the application thereof to any person or circumstances, is found to be invalid, the remainder of the provisions of this easement, or the application of such provision to the persons or circumstances other than those as to which it found to be invalid, as the case may be, shall not be affected and shall continue in full force and effect.

6.6 Authorized Representative. Each individual signing on behalf of a party to this Agreement states that he or she is the duly authorized representative of the signing party and that his or her signature on this Agreement has been duly authorized by; and creates the binding and enforceable obligation of the party on whose behalf the representative is signing.

IN WITNESS WHEREOF, said parties have hereunto executed this document the date and year first written below.

DATE: GRANTORS:

_____

_____

STATE OF MINNESOTA)
) ss
COUNTY OF CARVER)

The foregoing instrument was acknowledged before me this _____ day of _____, 2016, by _____, named in the forgoing instrument, and _____, his spouse, as their free act and deed.

EXAMPLE

_____
Notary Public

OR

STATE OF MINNESOTA)
) ss
COUNTY OF CARVER)

The foregoing instrument was acknowledged before me this _____ day of _____, 2016, by _____, Grantor.

_____
Notary Public

OR

STATE OF MINNESOTA)
) ss
COUNTY OF CARVER)

The foregoing instrument was acknowledged before me this _____ day of _____, 2016, by _____, a Minnesota corporation named in the forgoing instrument, and said that he did so pursuant to authority given him by the board of directors of said corporation.

_____
Notary Public

EXAMPLE

GRANTEE:
County of Carver

By: _____

STATE OF MINNESOTA)
) ss
COUNTY OF CARVER)

The foregoing instrument was acknowledged before me this _____ day of _____, 2016, by _____, Grantor.

This document drafted by:

Office of the Carver County Attorney
604 East Fourth Street
Chaska, Minnesota 55318
(952) 361-1400

EXAMPLE

CONSENT OF MORTGAGEE

The foregoing Conservation Easement is hereby consented to by _____, a national association.

BANK

By _____

Its_____

By _____

Its_____

Date: _____

STATE OF MINNESOTA)
) ss
COUNTY OF CARVER)

The foregoing instrument was acknowledged before me on _____, 20___ by _____, the _____ and _____, the _____, of _____, a national association on behalf of said national association.

EXAMPLE

EXHIBIT A (legal description)

EXAMPLE